Our 10 Best Table Saw Accessories

SHOP SECRETS FOR FAST FINISHING

Woodsmith®

www.Woodsmith.com

Vol. 25 / No. 149

dovetails made easy on the band saw

2 Router Bits for Dead-On Door Joinery

save money — build your own

Home Entertainment Center

A Publication of August Home Publishing

Woodsmith

No. 149 October, 2003

Publisher Donald B. Peschke
Editor Terry J. Strohman
Assistant Editors Ted Raife, Phil Huber
Art Director Todd Lambirth
Senior Illustrators David Kreyling, Dirk Ver Steeg, Harlan V. Clark
Graphic Intern Nathan Robertson

CREATIVE RESOURCES
Creative Director: Ted Kralicek • *Sr. Project Designers:* Ken Munkel, Kent Welsh, Ryan Mimick, Chris Fitch • *Shop Craftsmen:* Steve Curtis, Steve Johnson • *Sr. Photographer:* Crayola England

SPECIAL PUBLICATIONS
Corp. VP: Douglas L. Hicks • *Art Director:* Douglas A. Flint • *Senior Graphic Designer:* Chris Glowacki • *Senior Editor:* Craig Ruegsegger• *Assoc. Editor:* Joel A. Hess • *Graphic Designer:* Jonathan Eike

CIRCULATION
Circ. Oper. Director: Sandy Baum • *Circ. Marketing Director:* Wayde Klingbeil • *Circ. Marketing Analyst:* Patrick Walsh • *Renewal Mgr.:* Paige Rogers • *Strategic Business Analysts:* Kris Schlemmer, Paula M. DeMatteis • *Circ. Fulfillment Mgr.:* Stephanie Forinash • *Circ. Marketing Assoc.:* Stephanie Forinash• *Sr. Graphic Designers:* Mark Hayes, Robin Friend

CORPORATE SERVICES
VP of Finance: Mary R. Scheve • *Controller:* Robin K. Hutchinson • *Sr. Account.:* Laura J. Thomas • *Accts. Payable:* Mary J. Schultz • *Accts. Receivable:* Margo Petrus • *Production Dir.:* George Chmielarz • *Electronic Pub. Dir.:* Douglas M. Lidster • *System Administrator:* Cris Schwanebeck • *PC Maint. Tech.:* Robert D. Cook• *Pre-press Image Specialists:* Troy A. Clark, Minniette Johnson • *Assoc. Style Dir.:* Rebecca Cunningham • *New Media Mgr.:* Gordon C. Gaippe • *Web Site Art Dir.:* Gene Pedersen • *Web Server Admin.:* Carol Schoeppler • *Web Content Mgr.:* David Briggs• *Web Designer:* Kara Blessing • *Research Coordinator:* Nick Jaeger •*Prof. Development Dir.:* Michal Sigel • *H.R. Asst.:* Kirsten Koele • *Office Mgr.:* Natalie Lonsdale •*Facilities Mgr.:* Kurt Johnson • *Receptionist:* Jeanne Johnson • *Mail Room/Delivery:* Lou Webber

WOODSMITH STORE
Operations Director: Bob Baker • *Cust. Service Mgr.:* Jennie Enos • *Warehouse Supr.:* Nancy Johnson • *Buyer:* Linda Jones • *Admin. Asst.:* Nancy Downey • *Sr. Cust. Serv. Reps.:* Tammy Truckenbrod, Anna Cox, April Revell, Deborah Rich • *Cust. Serv. Reps.:* Valerie Jo Riley, Kim Harlan, Cheryl Jordan • *Warehouse:* Sylvia Carey, Larry Morrison, Neil Nardini •*Store Mgr.:* Dave Larson • *Merchandise Marketing Mgr.:* John Siberell• *Paint Dept. Mgr.:* James Hockins •*Asst. Manager:* Tim Thelen • *Sales Staff:* Mark Johnson, Gregory Kauzlarich, John Warren, Dave Fremming, Stephen Duncan, Brian Simmons, Sherrie Simmons, Geogia Klimek, Mike McCavley, Dan LeBeau • *Office Mgr.:* Vicki Edwards

Woodsmith® (ISSN 0164-4114) is published bimonthly (Feb., Apr., June, Aug., Oct., Dec.) by August Home Publishing Company, 2200 Grand, Des Moines, IA 50312.
Woodsmith® is a registered trademark of August Home Publishing.

Copyright© 2003 August Home Publishing Company. All rights reserved.

Subscriptions: Single copy: $4.95. One year subscription (6 issues), $24.95. (Canada/International add $10 per year, U.S. funds.)
Canadian Subscriptions: Canada Post Agreement No. 40038201. Send change of address information to PO Box 1051, Fort Eric, ON L2A 6C7.
Periodicals Postage Paid at Des Moines, IA and at additional offices. USPS/Perry-Judd's Heartland Division Automatable Poly.
Postmaster: Send change of address to *Woodsmith*, Box 37112, Boone, IA 50037-2112.
Subscription Questions? Write to *Woodsmith*, P.O. Box 842, Des Moines, IA 50304-9961 or call 1-800-333-5075, 8:00 am to 5:00 pm, Central Time, weekdays. Or send an email to: orders@woodsmith.com
Email: woodsmith@woodsmith.com
World Wide Web: http://www.Woodsmith.com

AUGUST HOME PUBLISHING COMPANY

Printed in U.S.A.

EDITOR'S COLUMN

SAWDUST

Wow! That was the word I heard over and over whenever someone would see the entertainment center featured in this issue. Take a look at the front cover and I think you'll agree this is an impressive piece of furniture.

But what impresses me the most about this project is what you *don't* see — the way it was designed. And the credit for that goes to Ted Kralicek. Ted is our Creative Director and he certainly came up with some creative solutions on this project.

The first problem to deal with was size. It wouldn't make sense to build a large project like this if you couldn't move it out of the shop.

The solution was to build the entertainment center in sections. A two-piece center section holds a large television, and two side cabinets can be used for audio equipment and storage. In addition to making the whole project more manageable, it allows you the option of building the center section by itself. Or if you prefer, just building a single side cabinet.

After deciding on the basic shape, the next step was coming up with a way to put it all together. From the start, I wanted to keep the joinery as simple as possible. But at the same time, the cabinets needed to be sturdy enough to hold heavy items like a large TV and audio equipment.

The solution couldn't be simpler. Each section is built around a set of open wood frames that are screwed together. Then the sides, top, and bottom are glued and screwed to the frames. Quick, easy, and strong — and no dadoes or grooves to cut.

For more creative ways to bring a big project down to size, check out the article beginning on page 22.

HELP WANTED

While we're on the subject of creativity, we're looking for a couple of experienced people to join us here at August Home Publishing. We have a position open for an editor and for a graphic designer/illustrator. If you're enthusiastic about woodworking and home improvement and enjoy working as part of a team, then we would like to hear from you. Send a cover letter and a resume highlighting your experience to: Human Resources, 2200 Grand Ave., Des Moines, IA 50312. Or you can send an email to: hr@augusthome.com.

Terry

Woodsmith Readers' Gallery

Visit other *Woodsmith* subscribers' workshops, and see photos of the projects they've built. It's all online in the new Readers' Gallery on the *Woodsmith* web site: **www.Woodsmith.com**

We want you to be part of the Readers' Gallery! To submit photos of your favorite *Woodsmith* projects or views of your shop, follow the instructions you'll find at the Reader's Gallery.

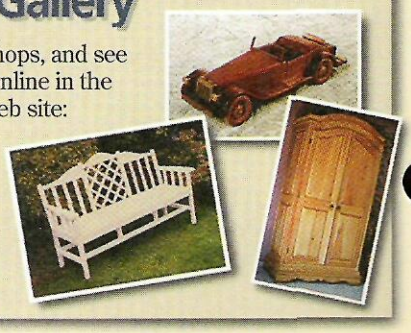

A LOOK INSIDE

CONTENTS

Features

Big Dovetails on the Band Saw 6

A hand-cut look on the band saw? It's fast and easy once you know the secret. See how to make tight-fitting dovetails with a band saw — and a little hand-fitting with a chisel.

Elegant Nesting Tables 10

These three slide-together tables are simple to make. They're the perfect project for showing off large dovetails.

10 Best Table Saw Accessories 12

Turn your table saw into a much more versatile tool with this line-up of simple, shop-built accessories.

Simple Frame and Panel Joinery 18

With a rail and stile router bit set, you'll get strong, decorative, and perfect-fitting frame and panel assemblies in just two steps.

Fast Finishing 20

Finishing without the fumes, mess, and time. We'll show you how to put water-based stains and finishes to use on your next project.

Home Entertainment Center 22

This entertainment center has all you could ask for. It's big enough to hold all your electronic components, it looks great, and to top it off, it's surprisingly easy to build.

Glass Door Display Cabinet 30

Whether you build it as an add-on to the entertainment center or a stand-alone piece, this display cabinet will go together easily.

Divided-Light Glass Door 33

Nothing beats this traditional look. And it can be built without a lot of tricky joinery. We'll show you the simple steps.

Departments

Tips & Techniques 4

Sources 35

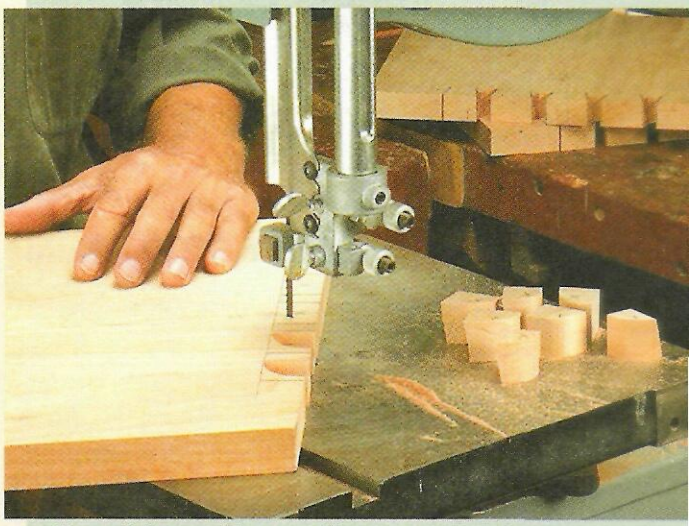

Band-Sawn Dovetails *page 6*

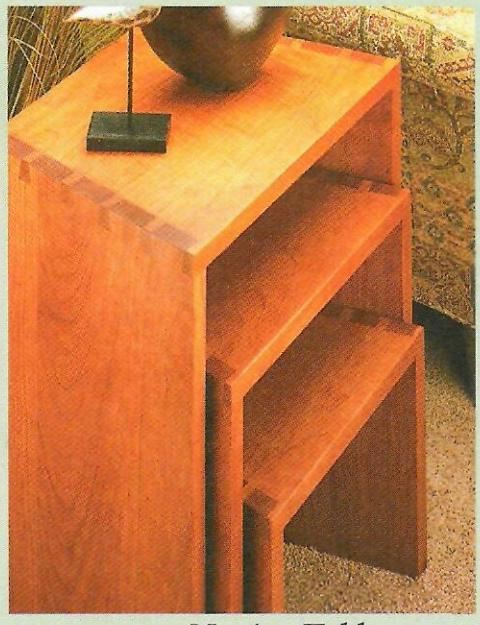

Nesting Tables *page 10*

Home Entertainment Center *page 22*

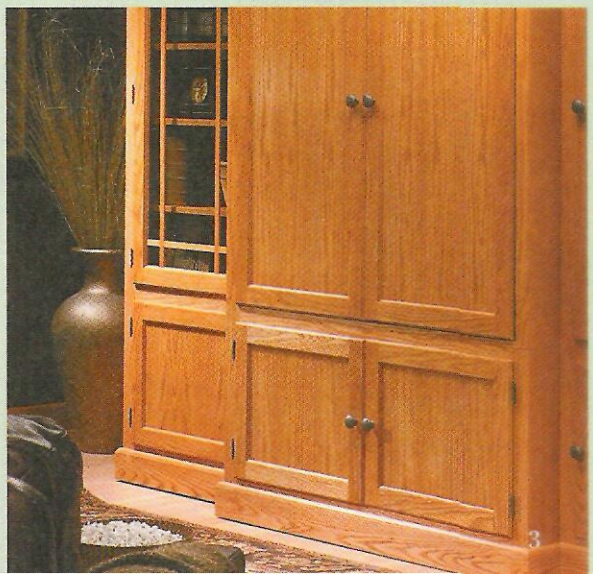

TIPS & TECHNIQUES

Laminate Cutting Guide

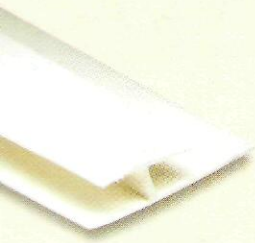

▲ *Plastic trim molding keeps laminate from sliding under the rip fence.*

I usually use my table saw for cutting plastic laminate to rough size. But the laminate has a tendency to slide under the rounded bottom edge of the rip fence and get wedged, as you can see in Fig. 1 below.

To get around this, I now use a piece of plastic trim molding that I found at a local home center. The molding has a wide flange that tucks under the fence. The short side holds the laminate in a groove, as in Fig. 2. This gives the workpiece a channel to ride in. Shop Note: Be sure to adjust the fence to account for the width of the molding.

David Youngren
Clovis, California

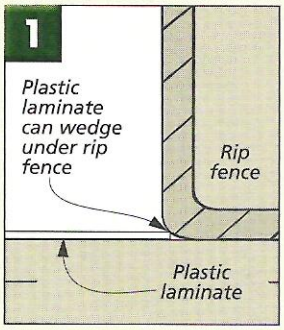

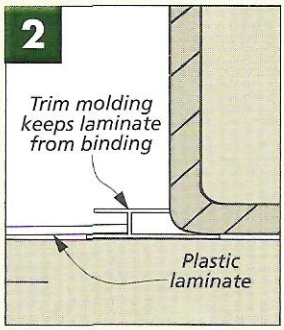

Dust Collector Helper

I work by myself in the shop. One job that's a challenge to do alone is emptying the dust collector bag. It's easy to lose my grip on the bag after releasing the clamp, dumping sawdust all over the floor.

To keep this from happening, I cut off the top half of a pair of eye bolts and screwed them to the collector, as in the drawing and detail 'a' below.

A set of grommets installed in the bag provide a way to hook the bag. Now when I loosen the clamp, the bag stays put until I can get a better grip. Plus, it's now a cinch to reattach the clamp.

Perry Polowchak
Palmyra, New York

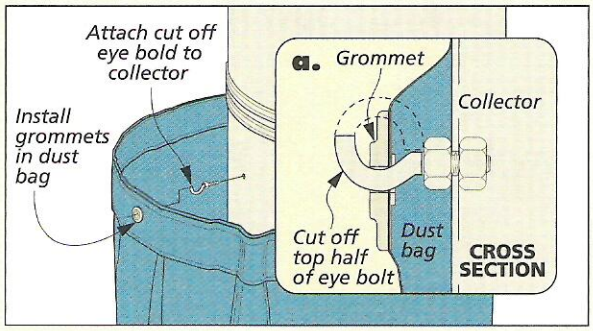

Template Routing Spacer

▲ *Framing tape (top) is much thicker than regular carpet tape (bottom) used for attaching router templates.*

Template routing is a good way to rout identical patterns in multiple parts. With a straight bit and a guide bushing, you can rout patterns that would be hard to duplicate freehand.

The problem is, some of the templates I've used in the past are thinner than flange on the bushing, as illustrated in Fig. 1, making it impossible for the base of the router to sit flat on the template.

Since some of my templates have intricate details cut out of them, making new ones isn't really an option. The solution to this problem was to come up with a slightly different way to attach the template to the workpiece.

I use a spacer made from foam framing tape. Note: the carpet tape I normally use is just too thin to raise the template far enough, as shown in the photo at left.

But the foam framing tape lifts the template, giving it just enough extra space for the router to ride smoothly, as you can see in Figs. 2 and 2a.

Todd Duran
Portage, Michigan

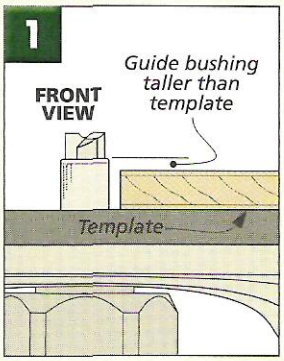

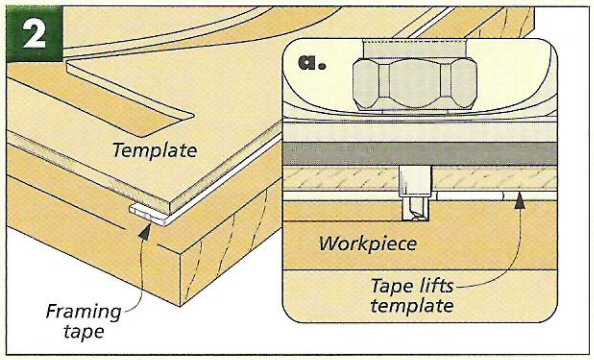

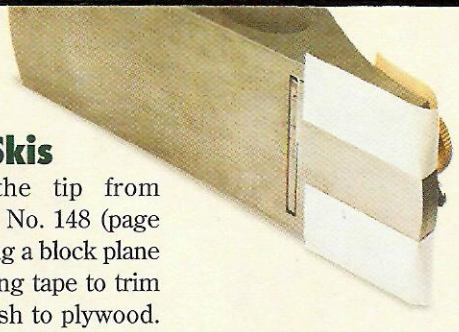

Plane Skis

I liked the tip from *Woodsmith* No. 148 (page 29) on using a block plane and masking tape to trim edging flush to plywood. I've come up with a similar technique to trim wood screw hole plugs flush to the surface of a workpiece.

As you can see from the photo above, instead of attaching the tape to the workpiece, it's attached to the block plane. After setting the blade of the plane for a fine cut, I placed two pieces of tape on the edges of the plane, just in front of the blade. These "skis" do two things: They lift the plane just above the surface of the wood so that the plug is trimmed flush without gouging the workpiece. And second, they create a path for the plug to ride in as it's cut.

Ralph Tyler
Woodland Hills, California

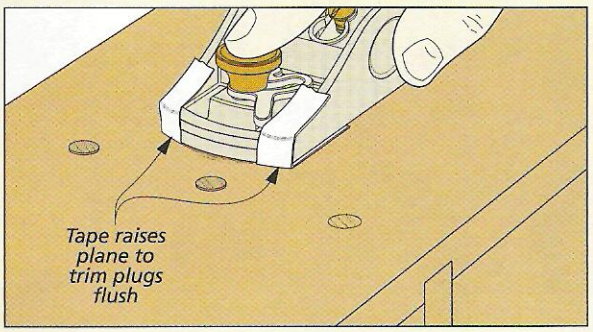

Stand Support

The roller stand in my shop is used just about every day. Because it can be adjusted easily, I use it for outfeed support on my band saw, router table, and table saw.

The only trouble is that it can be easy to tip over. The legs can fold up and collapse if a workpiece coming off the saw sags a bit and hits the roller without going over the top of it. To overcome this difficulty, I made the simple support that you can see in the photo at right.

It's nothing more than a long piece of 2x4 that has a pair of notches cut in it to fit over the feet of the roller stand. The notches keep the stand from folding together accidentally.

And the added weight of the support keeps the stand from tipping over. Once I have the stand set up at a tool, all I have to do is set the support piece over the feet and I'm ready to work.

John Freda
Huntington Bay, New York

Flexible Sanding Block

When it comes to sanding curves, I have a hard time keeping the curve nice and smooth. I usually end up with a few flat spots.

To solve this problem, I found a new material for a flexible sanding block — *Plexiglas*. I just attached a piece of self-adhesive sandpaper to a piece of 1/8" *Plexiglas*. It easily follows the curves of a project.

There's just one trick. To sand convex surfaces, it helps to flex the plastic while attaching the sandpaper. This way, the paper won't buckle as you bend it to your desired shape.

Stan Kaczmar
Woodland Hills, California

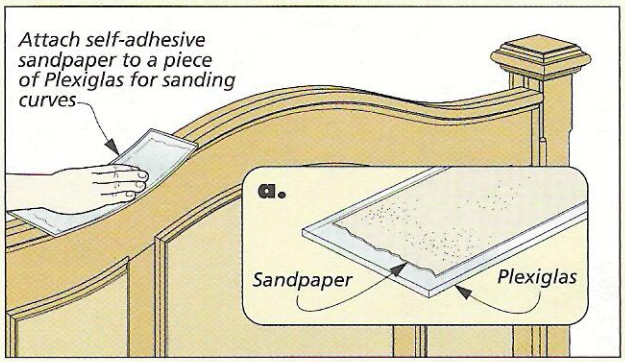

FREE
Online Tips

If you'd like even more woodworking tips, there's a simple solution. Just visit us at our web site and sign up to receive a free tip via email every week.

www.Woodsmith.com

SUBMIT YOUR TIPS

If you have an original shop tip or woodworking technique, we would like to hear from you and consider publishing your tip in one or more of our print or electronic publications.

Just write down your tip and mail it to us: *Woodsmith*, Tips and Techniques, 2200 Grand Avenue, Des Moines, Iowa 50312.

Please include your full name, address, and daytime telephone number so that we can contact you in case we have any questions.

If you would like, you can FAX it to us at 515-282-6741 or send us an email message at: woodsmith@woodsmith.com. We will pay you up to $200 if we decide to publish your tip.

▼ ***Stanley Krasovic*** *of Honesdale, PA mixes his craft paint by placing it in a plastic bottle taped to the blade of a reciprocating saw. A few cotton balls cushion the bottle while running the saw for a few seconds.*

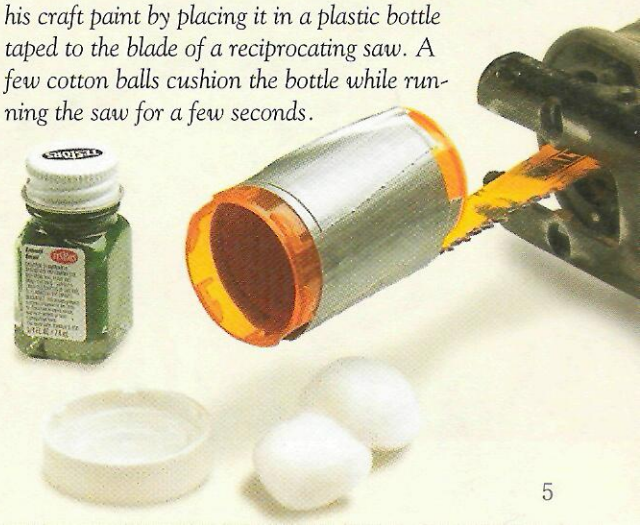

BAND-SAWN DOVETAILS

Find out how easy it is to get great-looking dovetails like these. All it takes is a simple band saw technique and sharp chisels.

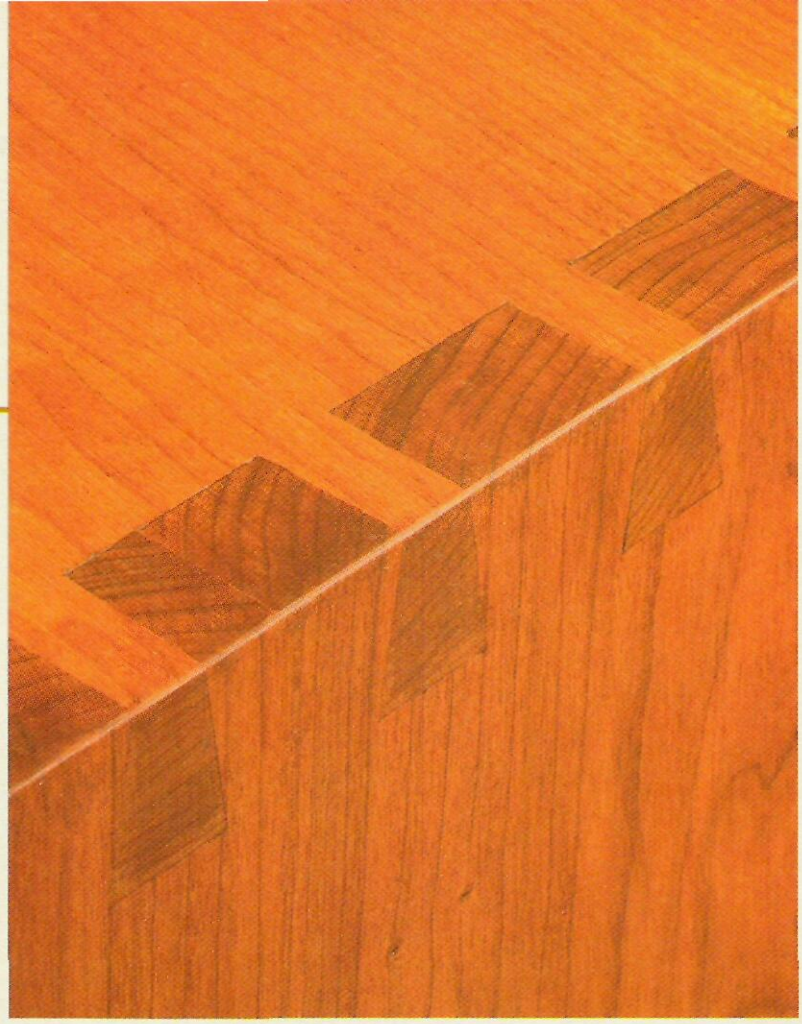

You just can't beat the look of hand-cut dovetails. But when it comes to cutting big dovetails, like those on the nesting tables, this can be a lot of work. To make things a little easier and faster, I used a technique that lets the band saw do most of the heavy work. You'll only need to do some fine tuning of the joint with a chisel. That's what I like about this technique — it combines the speed of power tools with the fine-crafted look that only hand tools can provide. So take some extra time to sharpen your chisels and put a new, sharp 1/4"-wide blade on the band saw and you'll be ready to get started.

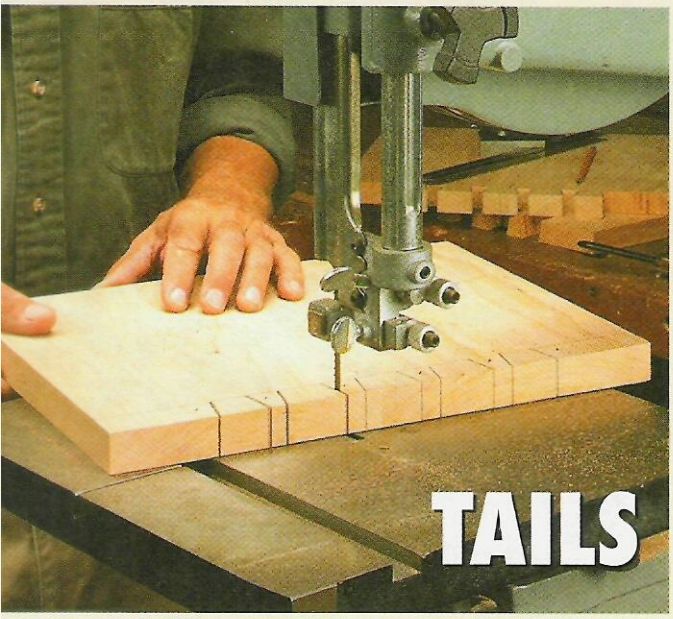

BAND SAW TUNE UP. The first thing you'll want to do is make sure your band saw is running well. Start by checking to make sure that the blade is square to the table. Like I mentioned before, put in a new blade. This will give you the smoothest cuts and the best results. And one more thing: I usually crank up the tension a little more than usual to make sure that the blade runs straight and true.

ACCURATE LAYOUT. With your band saw prepared, the next thing to do is lay out the dovetails. Although it doesn't really matter whether you start with the pins or tails, I like to start with the tails. And like a lot of woodworking joints, one of the keys to crisp dovetails, like you see in the photo above, is precise layout.

The layout begins by marking the baseline on the tail workpiece, as shown Fig. 1. The baseline should be equal to the thickness of the pin board. To do this, I simply set the tail piece on end next to the pin piece. Then trace a line on all four sides with a pencil running along the edge of the pin board.

The next step is to measure and mark the tails on both sides of the board. Since the pieces on the nesting tables are oversize, the easiest way to mark the tails is to start from the center and work your way out.

Now measure and mark the tails on the end of the board, as shown in Fig. 1. To mark the angles on the faces, I set a bevel gauge to the angle of the dovetails (10°) and drew in the lines, as in Fig. 2. (Note: I used pliers to tighten the bevel gauge to prevent it from slipping.) By marking the dovetails on both sides it'll help you see the tails take shape when trimming.

To help keep things straight, mark an "x" in the waste area. This will help you see on which side of the line to cut at the band saw.

REMOVE WASTE WITH BAND SAW. With the tails laid out, you're ready to start cutting. Doing this with the

band saw really makes things simpler. There are just two steps here. First, you'll rough out the waste between each tail. And second, the baseline is trimmed using the fence.

There's really nothing unusual about roughing out the waste. Begin by making straight cuts on the waste side of the layout lines. I stop at the baseline, as you can see in Fig. 3 and the bottom photo on the opposite page. (Staying close to the layout lines cuts down on the amount of chisel work later.) Then back the blade out of the cut.

Once all the straight cuts have been made, you can go back and make a curving cut to remove the waste. Note: The loose waste piece is trapped by the tails, so you'll want to back the blade out slowly.

CUTTING THE BASELINE. Up until now, there's been nothing too difficult about this technique. But this next step is where the advantages of using the band saw really stand out.

One of the challenges of hand cutting dovetails is getting a straight baseline. But instead of doing this by hand, I use the fence on the band saw to help cut the baseline to it's final position. Once this is done, you won't have to touch it again.

The first thing you'll need to do is set the fence to the baseline measurement. What you're looking for is the blade to cut along the baseline as the end of the workpiece runs along the fence, as in Fig. 4b.

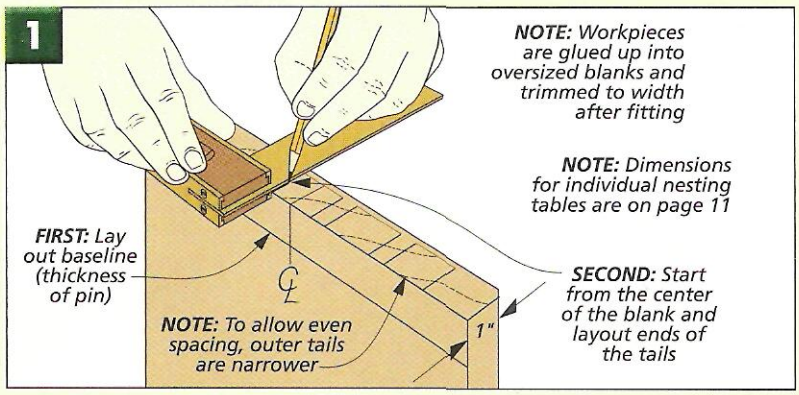

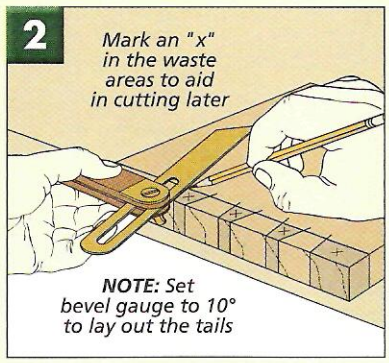

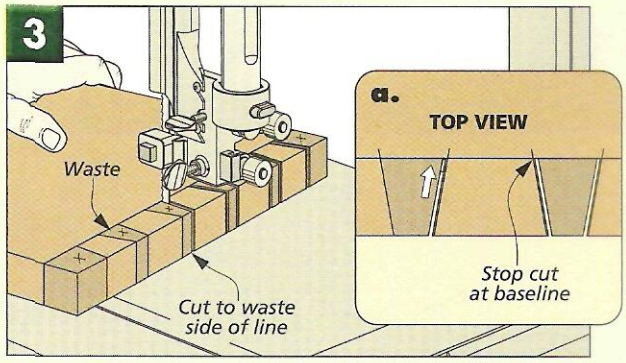

At first, the workpiece probably won't be able to run against the fence at all because of waste. That's okay, because it takes a couple of passes to get there. As you cut, angle the workpiece so the blade will cut closer to the baseline.

Then to clean up the other corner of each socket, I flipped the piece upside down and made another set of cuts. By this time, you should be pretty close to the line. Just repeat this process until the workpiece can ride smoothly along the fence.

TRIMMING THE TAILS. At this point, the tails are cut to rough shape and the baseline has been cut. The tails can now be pared down to the layout lines, as in the photo below.

While trimming, I pay close attention to the feel of the cut. Most of the time, there's only light resistance with a sharp chisel. But if the pushing becomes more difficult and the wood starts chipping, the grain is changing. When this happens, I change the direction of the chisel and pare from another angle.

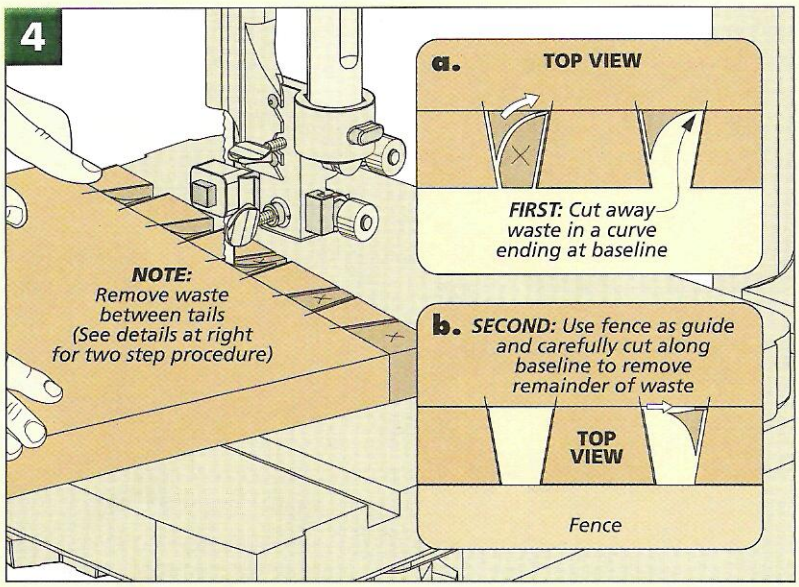

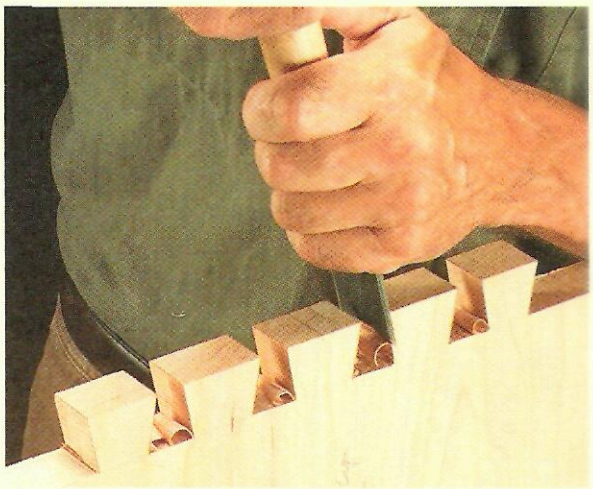

▲ *When trimming the tails, use a wide chisel to keep the surfaces flat. And by just pushing the chisel (rather than using a mallet), it's easier to sneak up on the fit.*

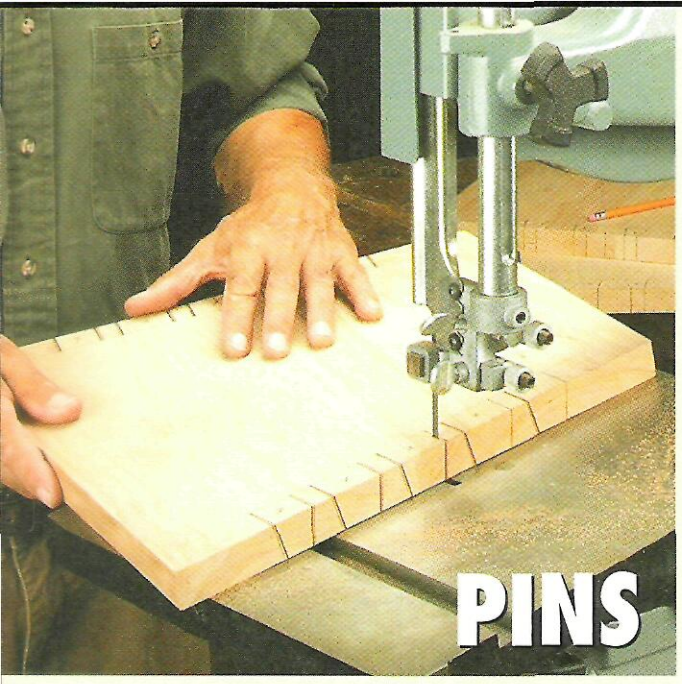

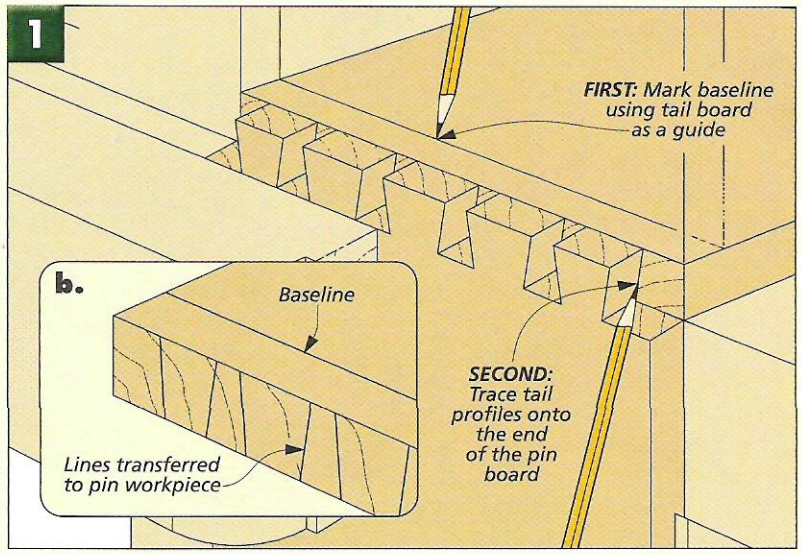

When it comes to laying out and cutting the pins, you'll find that it's a lot like the procedure for making the tails. And this is just one of the things that I like about cutting dovetails this way. Once you've completed one half of the joint, the other half is done pretty much the same way.

TRANSFER THE LAYOUT. Here again, you'll begin by marking the baseline on the workpiece using the tail board as a guide. Then the pins can be marked onto the end of the workpiece. To do this, lay the pin board flat on the workbench and clamp the tail piece in front of it. Then trace the sides of the tails onto the end of the pin board with a pencil (Fig. 1).

The next step is to layout the pins on both side of the board. I did this by drawing lines that connect the end markings to the baseline with a square, as in Fig. 2. And just as you did before, mark the waste areas.

CUTTING THE PIN SIDES. At this point, the pins can be cut. The biggest difference from cutting the tails is that, here, the pins are angled. So to do this, you'll need to tilt the table of the saw to the same angle as the pins (10°), as in Figs. 3 and 3a. I like to double check the angle by going around to the outfeed side and looking to see that the band saw blade matches the layout lines.

With the table tilted, you can now cut one side of each pin, stopping just short of the baseline. To cut the other side of the pins, you'll need to tilt the table in the other direction.

CUTTING OUT THE WASTE. Removing the waste for the pins is a little different than you might expect. Start by resetting the saw table square to the blade. Then place the workpiece with the outside face up on the table, as you can see in Fig. 4.

Now, make curving cuts down to the baseline. But instead of cutting down one of the lines already cut, you'll need to start further in on the waste side (Fig. 4a). To see why, take a look at the end of the workpiece. If you were to start at one of the previous cuts, you'd end up cutting off the corner of the pin.

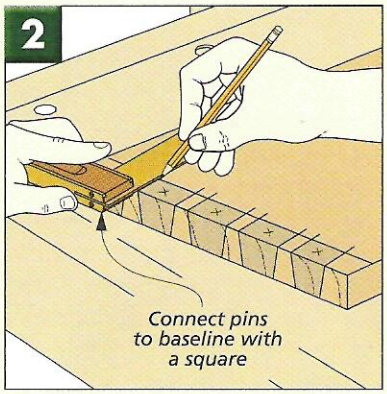

As you cut, slowly curve the blade to one of the previous cut lines. When you reach it, you can stop the cut when you see the waste piece break free. Now you may notice that the blade cuts into the pin slightly, as shown in Fig. 4b. But don't worry, this is on the side of the joint that won't be seen and doesn't affect the strength of the joint.

CUTTING THE BASELINE. Once you've removed all the waste, you can set

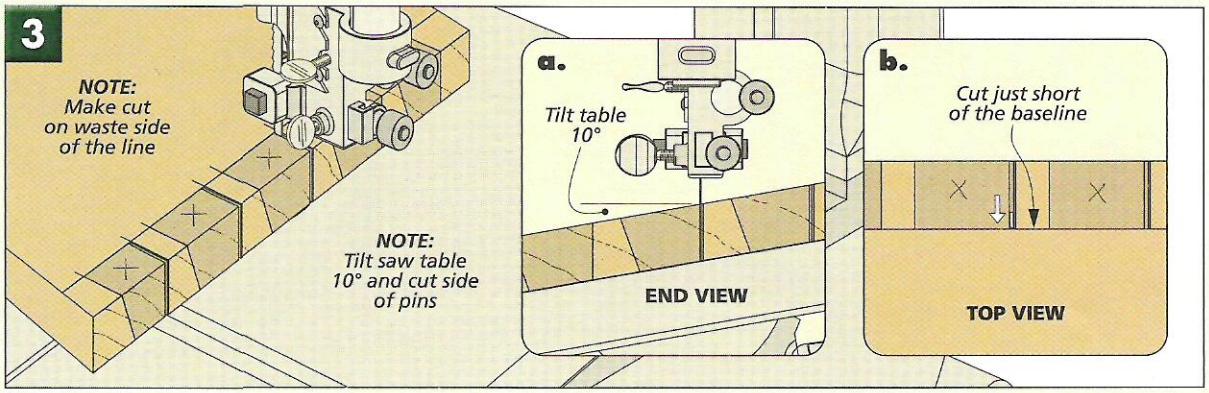

up to cut the baseline. The baseline is cut the same way as the tails. First set the fence and cut the pin sockets in one direction. Then flip the workpiece over and cut in the other direction, as shown in Fig. 4c. Finally, trim the pins to the layout lines, as you can see in the photo at right.

FITTING THE JOINT. With both pins and tails cut out, this is where the band saw work really pays off. The reason is that you've eliminated a lot of the hassle by cutting the baseline accurately with the band saw. Now you'll notice that the joint doesn't fit together at this point. But that's okay. There's still some final trimming left to do. The process is relatively simple. For some tips on how to do this, check out the box below.

Basically, you stop and test the fit of the joint often and take small shavings with a chisel to sneak up on a snug fit. This way, the dovetails can simply be tapped together.

GLUING THE JOINT. The last step is to glue the joint together. And since there's a nice, snug fit, you won't need much glue. I've found that it's only necessary to brush glue on the sides of the pins and tails. When the glue dries, plane or sand the pins and tails flush to the sides. W

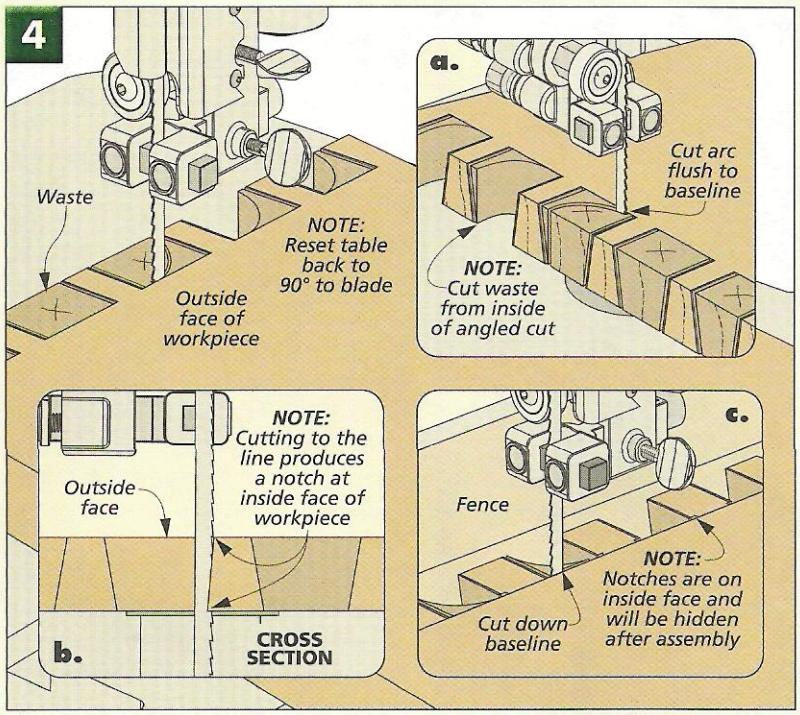

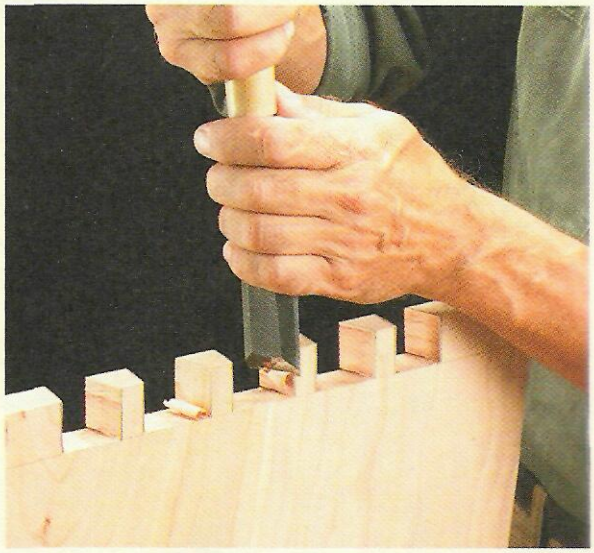

After cutting the waste and baseline on the band saw, a sharp chisel makes quick work of trimming the pins to the layout lines. Then with careful paring of the inside, unseen faces of both pins and tails, you'll end up with a snug fit and a crisp-looking dovetail joint.

PARING FOR A TIGHT FIT

To get really tight-fitting joints there are only two simple steps — testing the fit and paring with a chisel.

I start by testing the fit of the joint. To do this, try and fit the pin board into the tail board, as shown in Fig. 1. Then mark the pins and tails that need the most work with a pencil.

From there, you can move on to paring the joint. By paring, you are *carefully* slicing tiny amounts of material off the faces of the joints. As you do this, check the fit fairly often.

There's one other trick I use to get a tight fit. As you can see in Fig. 2, I cut a very slight taper on the lower, inside faces of each tail. Now when you test the fit again, you'll notice that the wide portion of the pins will begin to slip further in. Now, just repeat the steps shown in Figs. 1 and 2 until the joint can easily slide together about ¾ of the way. From here, you should be able to tap it home with a mallet.

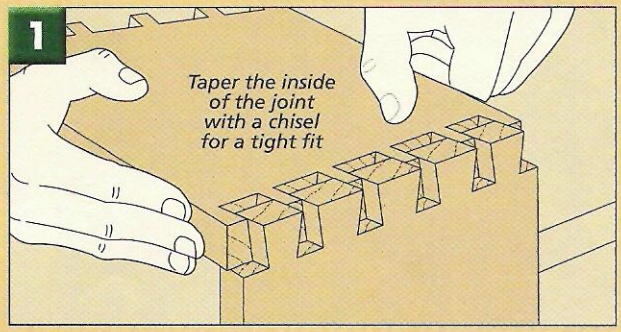

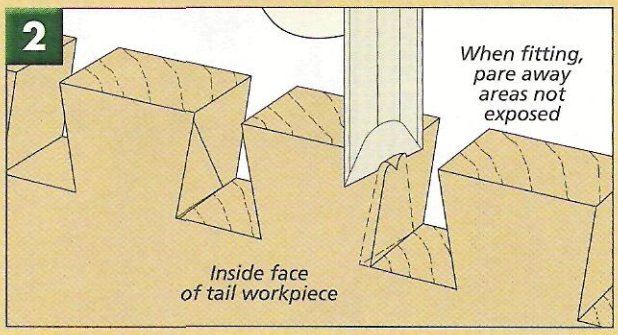

NESTING TABLES

Build one or build all three. Either way, these tables with their hand-fit dovetail joinery are sure to stand out in a crowd.

Big dovetails. That's what first gets noticed on these nesting tables. After all, there's really not much to the tables. Each table is made from three boards — two sides and a top. Although they are an unusual shape, you'll notice that only the top is tapered slightly. This taper lets them nest together neatly. But what makes the tables really stand out is how you join the three boards.

Because these dovetails are big, we decided to use a new technique for making them. This band saw technique makes cutting them much simpler. You can read more about that on page 6.

And with just two sides to join, there's not a lot of work involved either. Once you've cut and fit one set of dovetails, you'll find that making more goes a lot quicker. So if you've never tackled dovetails before, this is the project for you. Whether you choose to build one table or all three, you'll be a dovetail expert by the time you're done.

CHOOSING THE RIGHT MATERIALS. Before getting into cutting the dovetails, there are a couple of things you'll need to do first. Getting the tables to fit together nicely, and getting the best-looking joints, requires selecting the right stock.

To begin with, for these tables to be sturdy, I chose hefty 5/4 cherry stock. You'll also want to select boards that are as straight as you can find. Cupped boards will make cutting tight-fitting dovetails difficult. And boards with any twist in them will make it hard for the tables to slide together freely.

This is also one of the rare times where you don't want highly figured grain. For one, the dovetails would

To find out how to cut good-looking and tight-fitting dovetails with the band saw, check out the article on page 6.

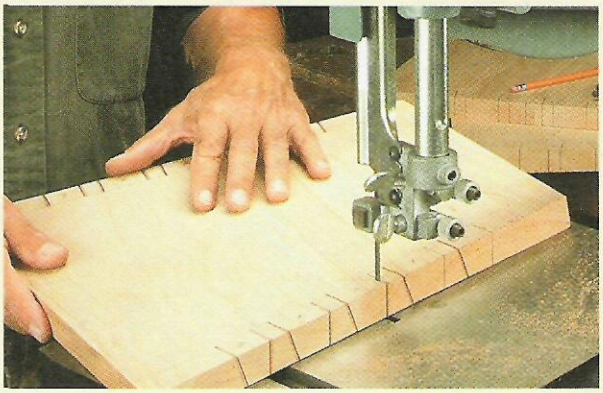

get lost in the figure. And besides, straight-grain stock makes the joints easier to trim and less likely to tear out.

PREPARING THE BLANKS. With the stock selected, the boards can be planed to the same thickness and glued up into blanks for the tops and sides. At this point, I would normally cut the pieces to final size and then start on the joinery. But the shape of these tables called for something a little different. I left the pieces extra wide while cutting the dovetails, as shown in Fig. 1. Afterwards, they can be ripped to final width.

There's just a couple of things left to do before cutting the dovetails. First, the sides can be cut to finished length. Then the top gets a slight taper (10°) cut on each end. Note: save the waste pieces for use later, as you can see in Fig. 1.

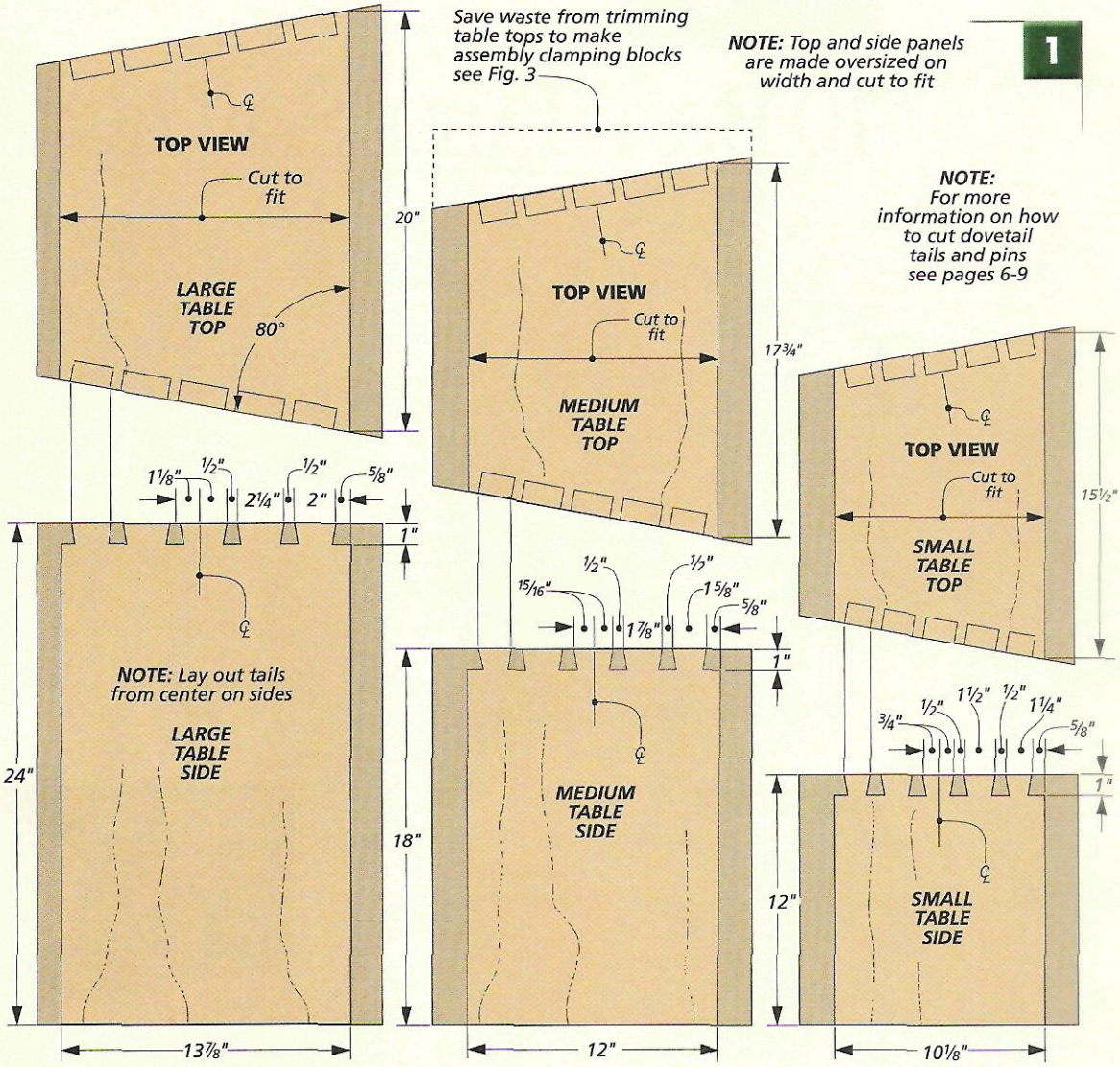

CUTTING THE DOVETAILS. With the parts cut to rough size, you can begin laying out and cutting the dovetails. The problem is, how do you lay out the tails on an extra-wide blank so they'll end up balanced? The solution is to start marking from the center and work your way out on the side pieces.

Next, the tails can be cut out on the band saw and trimmed with chisels. Then the pins can be marked and cut. Now, the dovetails are hand-fit together for a tight joint. For more on how to do this, turn to page 6. And when you're satisfied with the fit, you can rip the pieces to final width, as in Fig. 2.

ASSEMBLING THE TABLES. At this point, the tables are ready to be assembled. But for a project with such a unique shape, just using clamps won't work. To draw the dovetails together, I made a pair of notched clamping blocks for each table from the waste cutoffs as illustrated in Fig. 3. They apply pressure only to the tails so that they are pressed into the pin sockets.

After the glue is dry, all that's left is to sand the pins and tails flush and soften the sharp edges. W

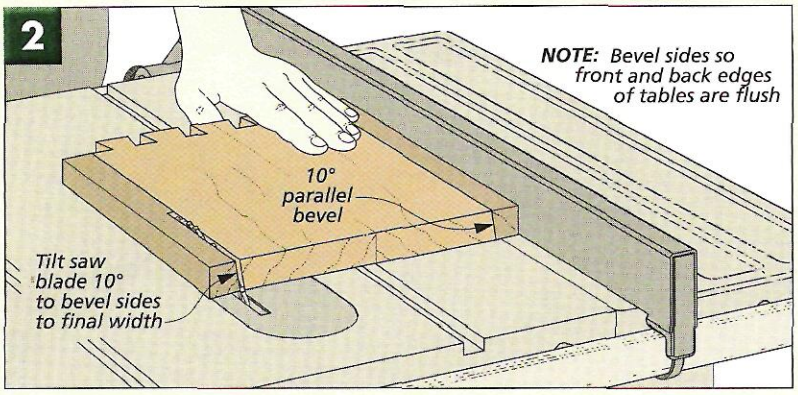

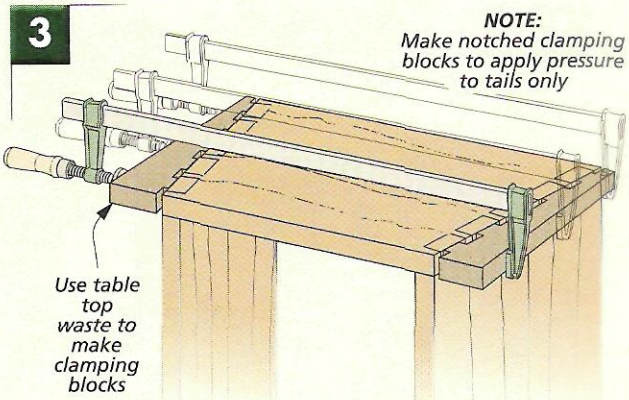

10 BEST TABLE SAW ACCESSORIES

With this lineup, you can't go wrong. These easy-to-build, shop-made accessories allow you to do more with your table saw — and do it better.

The table saw is king in my shop. It sits right in the middle where I can get at it easily. Whether it's just rough cutting a board to length or cutting accurate joinery for a project, I'll more than likely end up at the table saw.

And the reason for the versatility of my table saw is the simple shop-built "helpers" I've managed to accumulate through the years. My goal has always been to try to do the best possible job with the least amount of work and that's what this lineup is all about. These accessories allow me to do more with the table saw and do it faster, better, safer, and with a lot less effort.

Now we're not talking about stuff that's difficult and time consuming to build or to set up and use. For the most part, I like to keep these things as straightforward as possible. That way you can spend more of your time using the jigs to build a project, not building the jig and setting it up.

Even the more involved items can be built in just a few hours. But everything here is designed to give long, hard service.

JUST A NOTE. Some of these accessories are designed and sized to fit my 10" contractor's saw. But they can be adapted to fit just about any brand or size of table saw.

PUSH BLOCK

It might seem like a pretty simple accessory, but I've found that using the right push block not only makes your work safer, it can also improve the quality.

The main purpose of a good push block is to keep your fingers far away from the saw blade. And the first thing you'll notice about this push block, shown at work in the photo at right, is the comfortable "high mounted" handle. This is definitely a big plus in my book.

But the best part is that you don't have to sacrifice when it comes to control. The forward sweep of the handle allows you to put good downward pressure on the workpiece and achieve a steady, controlled feed. You'll get a clean cut while keeping your hands safe and avoiding the risk of kickback.

REPLACEABLE PARTS. Of course, a push block is going to get chewed up. That's what they're for. You sacrifice the push block to save your fingers. So this model is designed with a business end that can be easily replaced.

When the body or the hardboard push cleat get too worn, just cut new ones and switch out the handle (Fig. 1). And with the handle mounted "up above," it will never be touched by the saw blade.

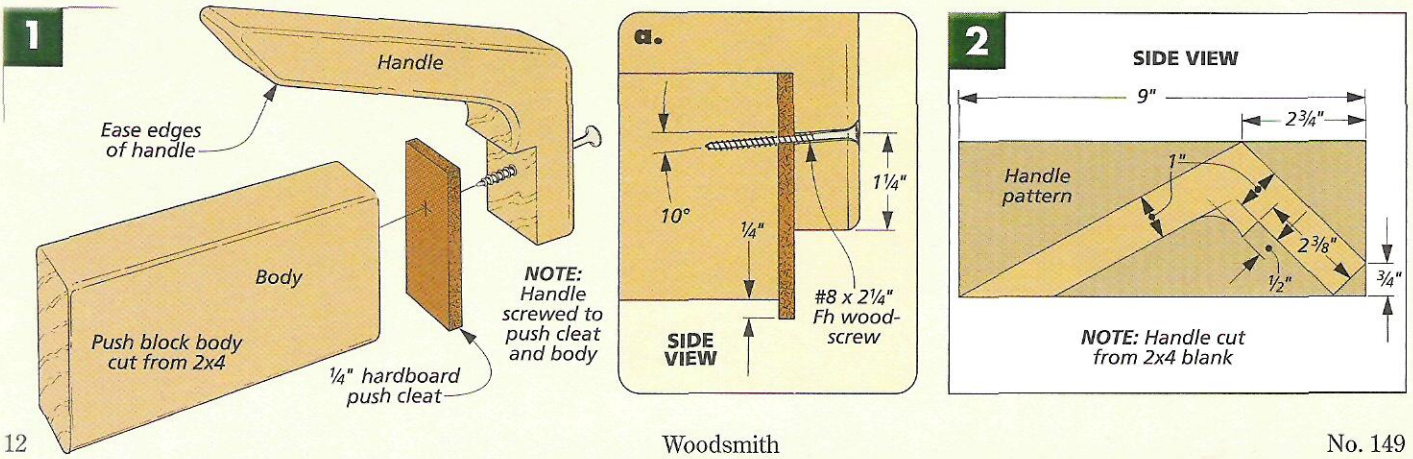

ADJUSTABLE MITER GAUGE FENCE

I sometimes think that even the table saw manufacturers would concede that the miter gauges supplied with their saws are just a starting point. That's because every one I've ever seen has holes in the face for mounting an auxiliary fence.

The small face of the gauge just doesn't have enough surface to provide solid support for the workpiece. It's easy to attach a short length of ¾"-thick stock to the face of the miter gauge to solve the problem, but I wanted a little more. I needed a fence that would provide good support right up to the cut at different angles.

ADJUSTABLE. That's a pretty tall order. But the answer is this adjustable miter gauge fence. As you can see in Fig. 1, it uses a rabbeted cleat system that allows the fence to slide toward or away from the blade depending on the angle of the cut (Fig. 1b). And just tightening a couple of screws locks the position of the fence. This allows you to make your cuts with complete control of the workpiece.

At times I'll even slide the fence beyond the blade so that it follows the workpiece through the blade and backs up the cut. And when the fence gets chewed up, it can easily be replaced.

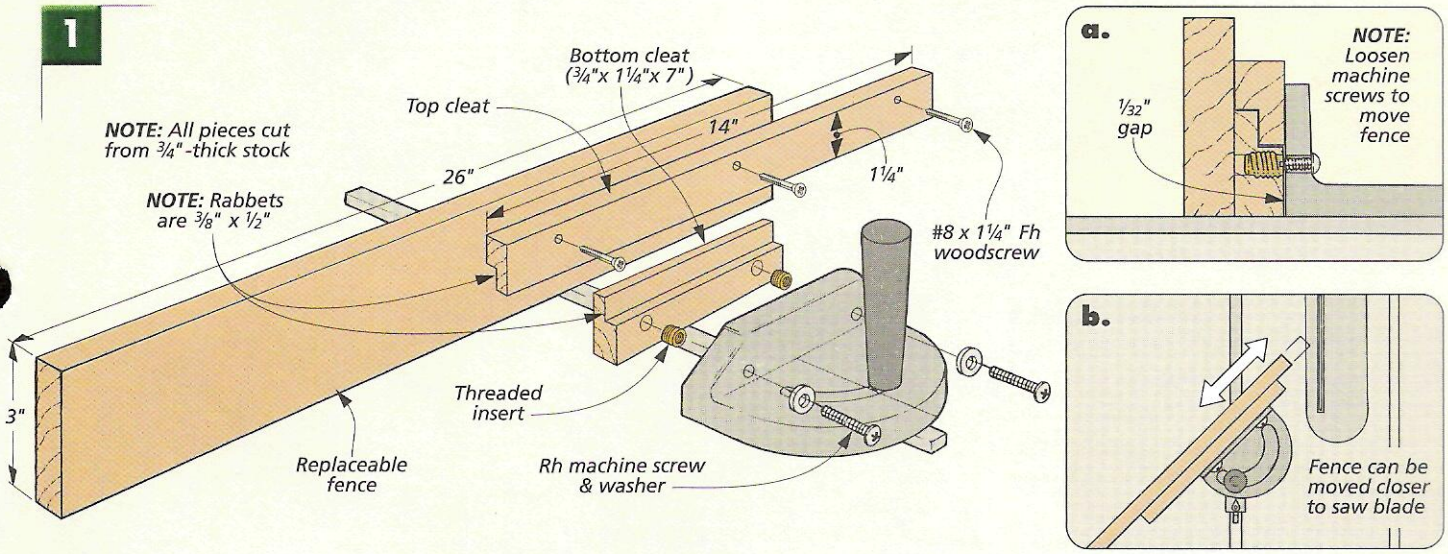

OUTFEED ROLLER

A good outfeed roller just takes the place of the friend you have to cajole into helping you rip those long boards or panels to width. So it makes life a little bit easier for both you and your friends.

I've tried the commercial outfeed rollers, but I think this shop-built model has them all beat.

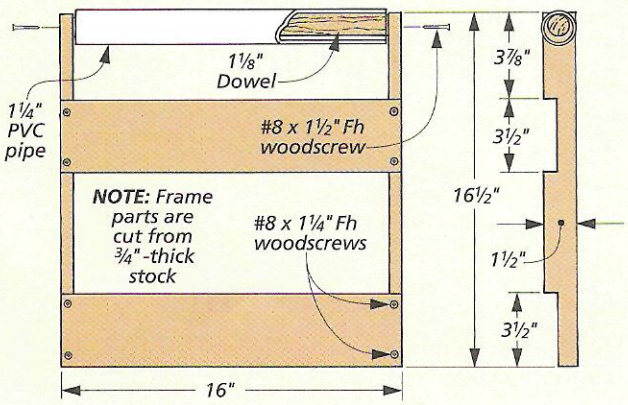

First, it's cheap to build. As you can see in the drawing, all you need is some scrap lumber, a short length of PVC pipe, a dowel, and woodscrews.

But the big plus is in the way the roller is supported. Most commercial outfeed rollers use a tripod system. This type has caused me grief on more than one occasion. They aren't very stable (see tip on page 5) and they seem to tip or even fall over at just the wrong time.

But this outfeed roller is designed to be clamped firmly to a sawhorse or other solid support, as in the photo above. So once you set it up, it'll stay put and allow you to focus on the task at hand.

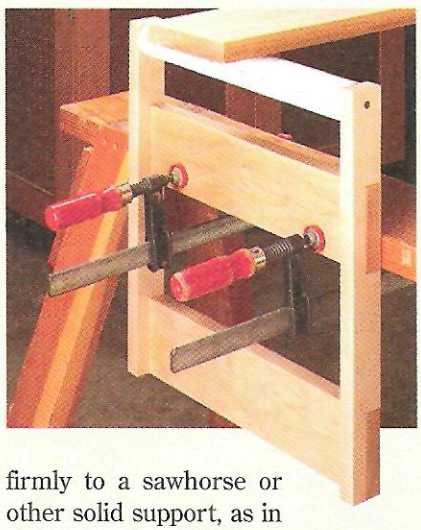

ZERO-CLEARANCE BLADE INSERT

Woodsmith GO ON-LINE EXTRAS

To view a short video on making a zero-clearance insert go to our website at woodsmith.com

A zero-clearance blade insert for your saw may not seem like an important item. But there are times when I wouldn't be without one on my saw.

The advantage it provides is that it supports the underside of the workpiece right up to the edge of the cut. So it's much less likely that the saw blade will cause chipping. It can be a real lifesaver when you need a perfectly clean cut in expensive hardwood or plywood.

When using a dado blade, a zero clearance insert is essential. I often use a dado blade to cut dadoes, rabbets — you name it. And when I do, I'll pop in an insert sized to the width of the blade. With this arrangement, you have solid support for a smooth, accurate cut.

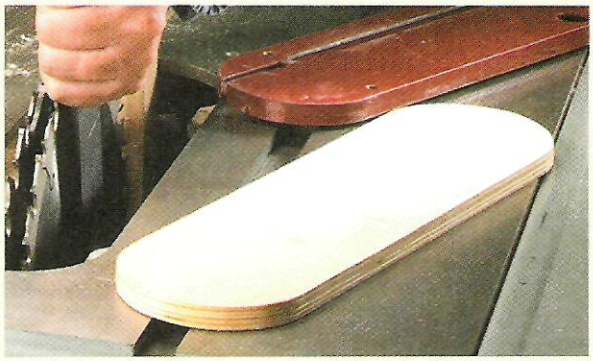

SIMPLE PROCESS. You can make one of these plywood inserts in short order. Figs. 1 and 1a show how to use the standard insert, first as a pattern, then as a routing template. This works great. And Fig. 2 shows how to complete the job.

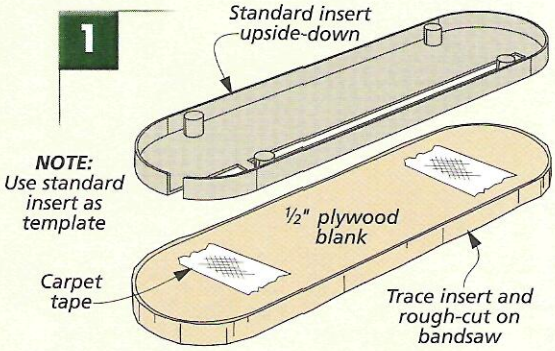

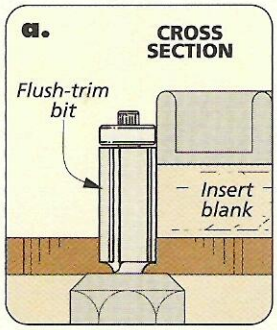

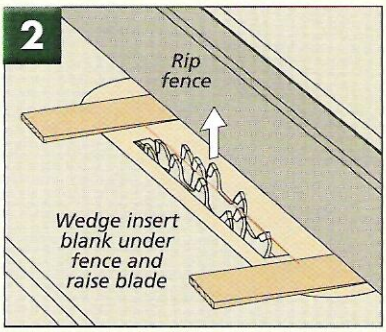

SLIP-ON FENCE

Once you build this auxiliary rip fence and slip it in place over your standard fence you might end up not taking it off very often. It's really that handy.

PLYWOOD CONSTRUCTION. As you see in Fig. 1, it's just a few scraps of plywood and woodscrews with a little bit of dado blade joinery. Size it to fit over your standard fence and you're in business.

EASY TO USE. The first big plus is how easily it slips into place on the saw. There are no screws or clamps to deal with.

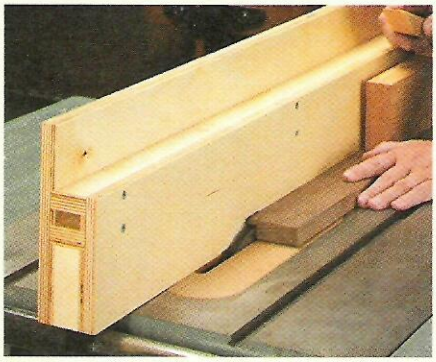

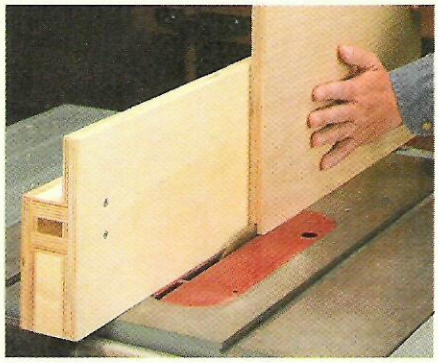

TWO SIDES. If you take a look at the photos above, you'll see that this auxiliary rip fence does double duty. When you want to use the dado blade to cut a rabbet, bury it in the short face of the fence. You'll still have plenty of room to use a push block.

But there are times when the extra support of a tall fence is what's called for. So just flip the fence, and go to work with one less thing to worry about.

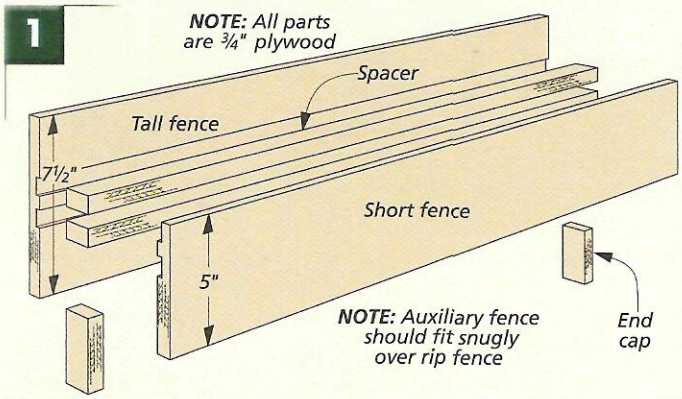

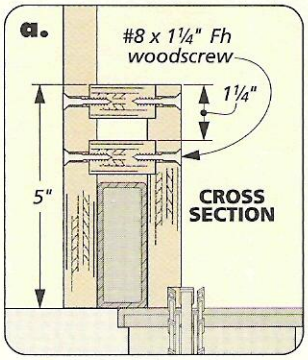

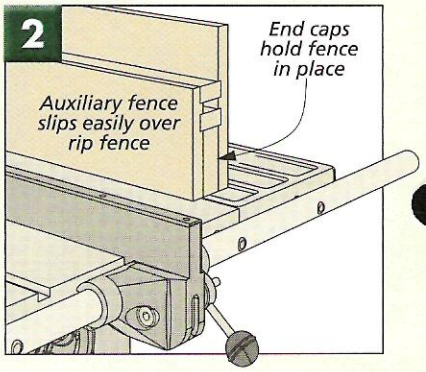

STRAIGHT-LINE RIP JIG

It seems that no matter how particular you are when buying lumber, you always end up with a few boards that are so crooked they look like they were meant to be chair rockers. And sometimes even the best stock bought "in the rough" doesn't have a good, straight edge to work from.

SOLUTION. So how do you dimension these boards into usable stock? Well the solution is the easy-to-use straight-line rip jig shown in the photo at right.

This jig is about as simple to put together as any you'll find. Nothing but a couple of lengths of plywood and a few inexpensive toggle clamps (Fig. 1). But it can reap big rewards salvaging some of that crooked lumber.

Just set the board on the straightedge, clamp it down with the quick-action clamps, and run it through your saw.

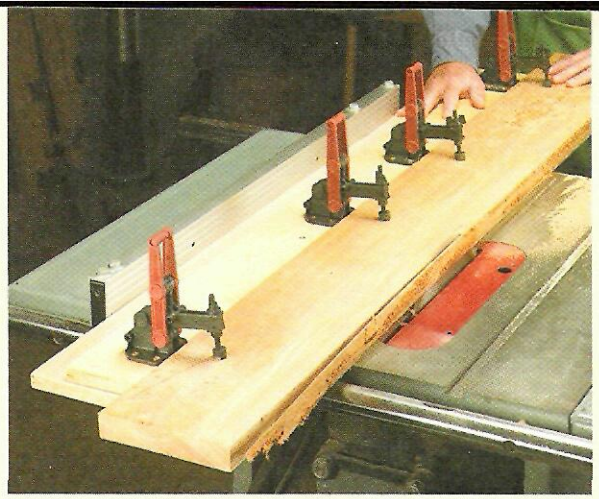

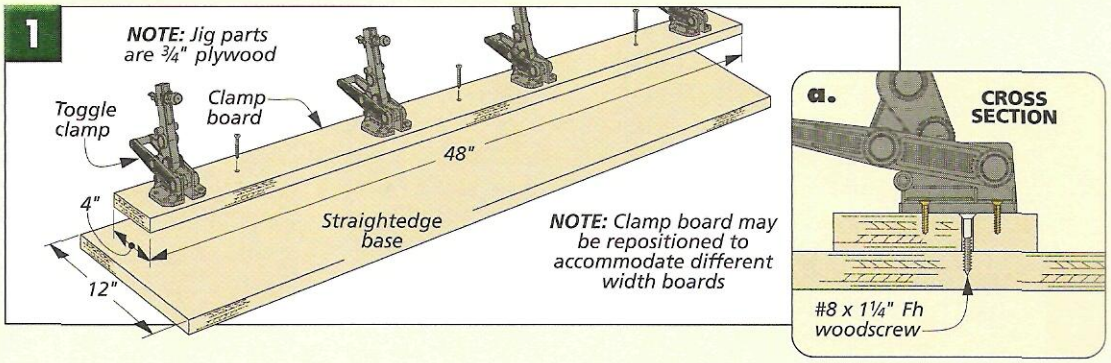

ADJUSTABLE FEATHERBOARD

There are times when you're working at the table saw that a third hand would really make life easier. Well, this adjustable featherboard isn't quite a third hand, but it can be the next best thing.

SELF CLAMPING. A featherboard uses lots of flexible "fingers" to apply steady pressure. But to do its job, it has to stay put. And on a table saw, clamping a featherboard isn't easy.

But not so with this model. It's designed to slip into the miter gauge slot of the saw and lock down with a twist of a wing knob. It can be positioned anywhere along the slot and then adjusted in or out to apply just the right amount of pressure.

WHEN. I like to use it when ripping stock to size. With steady pressure, there's less chance of the board wandering away from the fence.

THE RUNNER. The key part is the slotted expandable runner (Fig. 1a). A look at Fig. 2a shows how turning the wing knob forces the head of the bolt into the slot and locks it down.

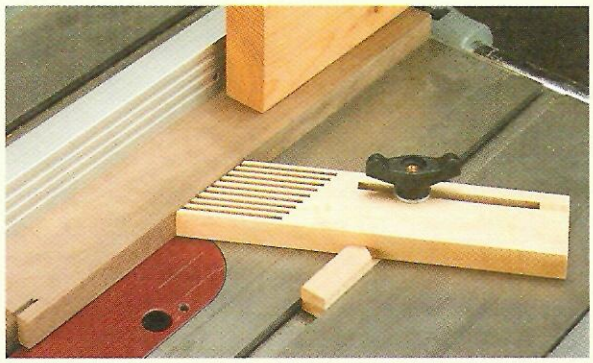

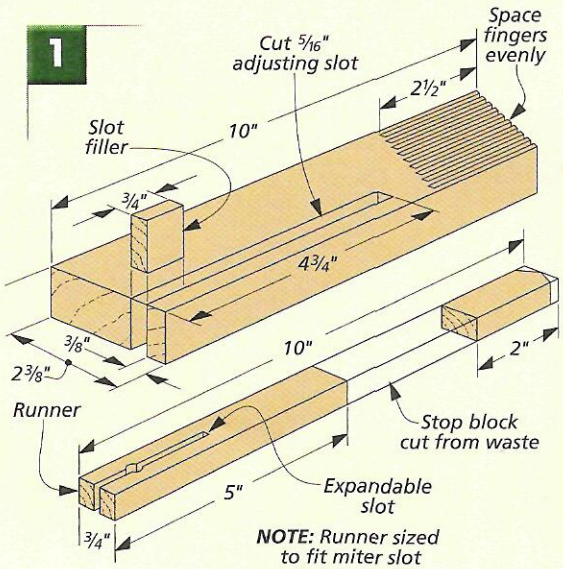

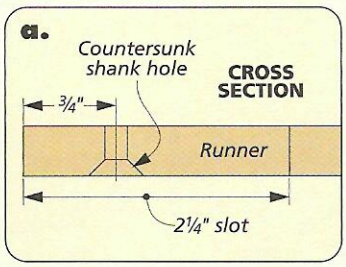

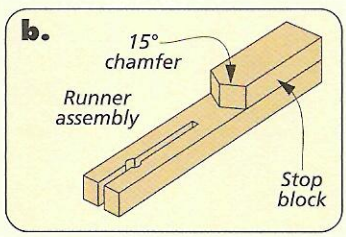

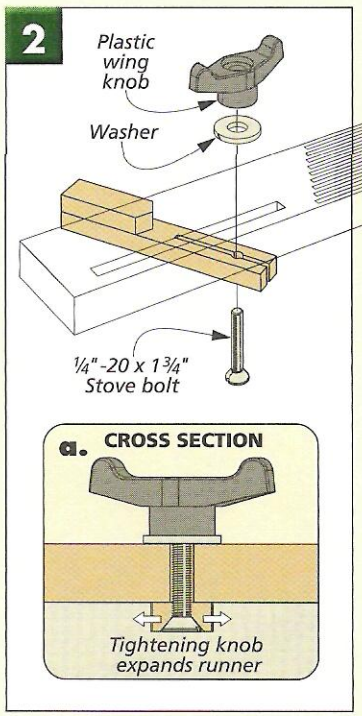

CUT-OFF SLED

Sometimes, after you buy a new tool or build an accessory, you wonder how you ever got along without it. And that's the case with this cut-off sled. This accessory is really a pretty simple idea, but once you build it, you'll find yourself using it time after time.

Think of it as just a really big miter gauge for working with wide boards and panels. A standard miter gauge with an auxiliary fence works great for cutting cabinet facings or door parts to length, but when it comes to crosscutting an 18"-wide plywood panel or a small tabletop you need a bit more control. And that's what this sled will give you.

THE WHOLE SAW. As you can see, it's designed to use both miter gauge slots and slide on most of the saw table. And where your miter gauge might have an 18" auxiliary fence, this cut-off sled has a 48" long fence (Fig. 1).

It might look a little awkward to feed through the saw. But I just wipe a thin coat of wax on the runners and the base and the sled glides easily across the table.

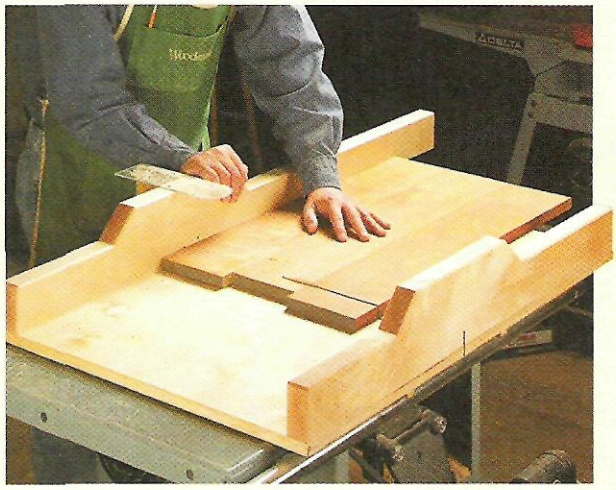

You'll also find that you get a more accurate cut using the sled. Since all the pieces — fence, bed and workpiece are moving across the saw together, there's almost no chance of the workpiece shifting or you losing your grip.

USER NOTE. When I make a cut, I always stand toward the left side of the sled and push with my right hand on the left top of the fence as you see in the photo above. My left hand is free to hold the workpiece flat and tightly against the fence. This makes control of the workpiece easier and the feed will be smoother.

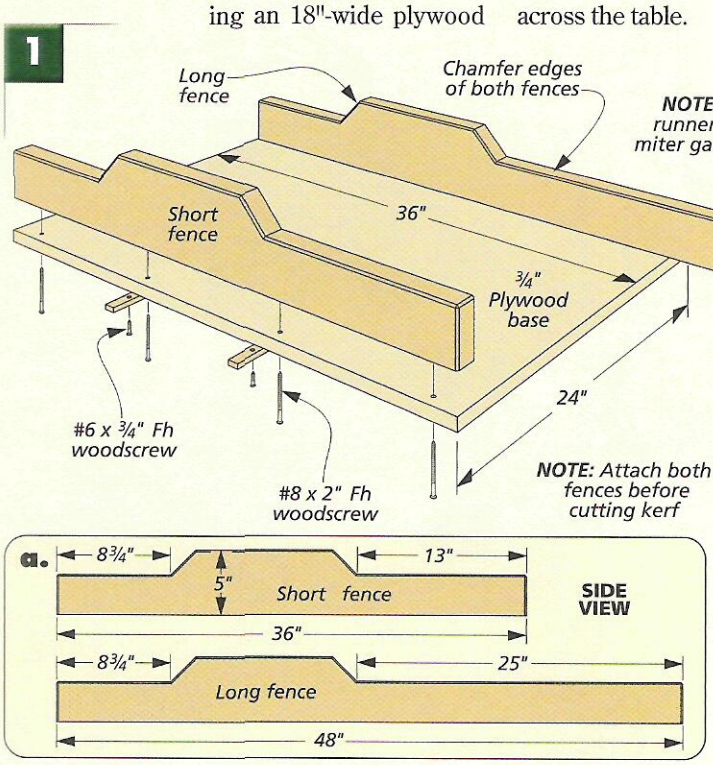

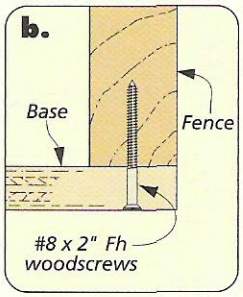

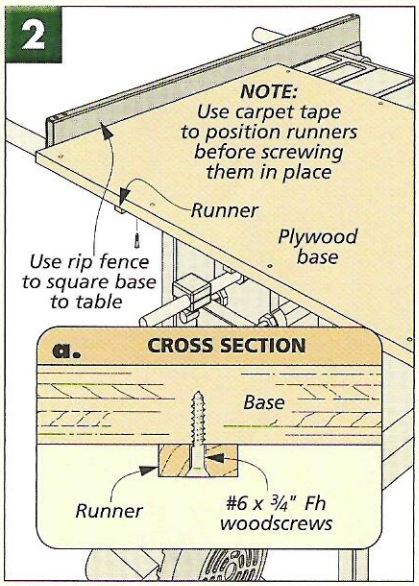

SAFETY SHIELD

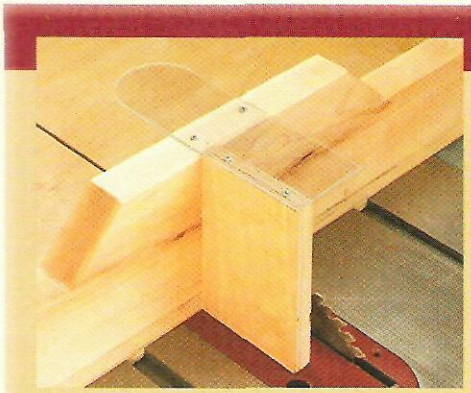

At the end of the cut, the saw blade passes through the rear fence. This was a bit of a concern to me. So to minimize any chance of an accident, I added a blade guard to the rear fence. It's nothing more than a plywood side guard that supports a small *Plexiglas* shield. It still allows you to see the workpiece and the saw blade, but helps protect you from possible contact.

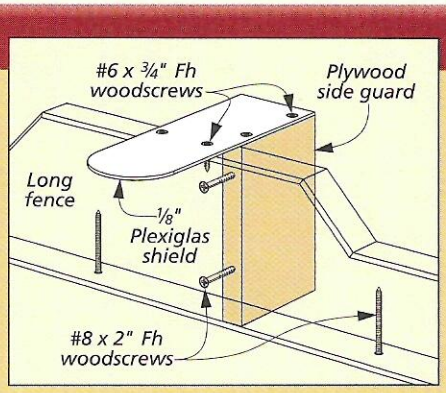

TENONING JIG

A tenoning jig is usually one of the standard add-on accessories offered by table saw manufacturers. But these are usually really heavy-duty models that are going to cost a pretty fair amount of money. So I opted to build my own version with just a few bucks worth of material and a little investment of time. And I think it works just as well.

BUILD IT. Just take a look at Fig. 1 and you'll see how easy this jig is to build. As you can see in the photo at right, it just slips over and slides along the rip fence of the saw. So the adjustment mechanism on the rip fence makes an easy job of lining up the cut.

USE IT. The question you might ask is why bother with a tenoning jig when a dado blade will do the job?

Well, of course you can use this jig to quickly cut the cheeks of a tenon, but that's not all it'll do.

Whenever I cut an exposed bridle joint or a half-lap I turn to this jig to create the smooth cheeks and tight fit that I want.

For a bridle joint I'll use the tenon jig to first cut the centered "groove" of the joint. I then turn around and reset the jig to cut an accurate tenon to fit. And both halves of the joint end up perfectly smooth, without the score marks or steps left by a dado blade.

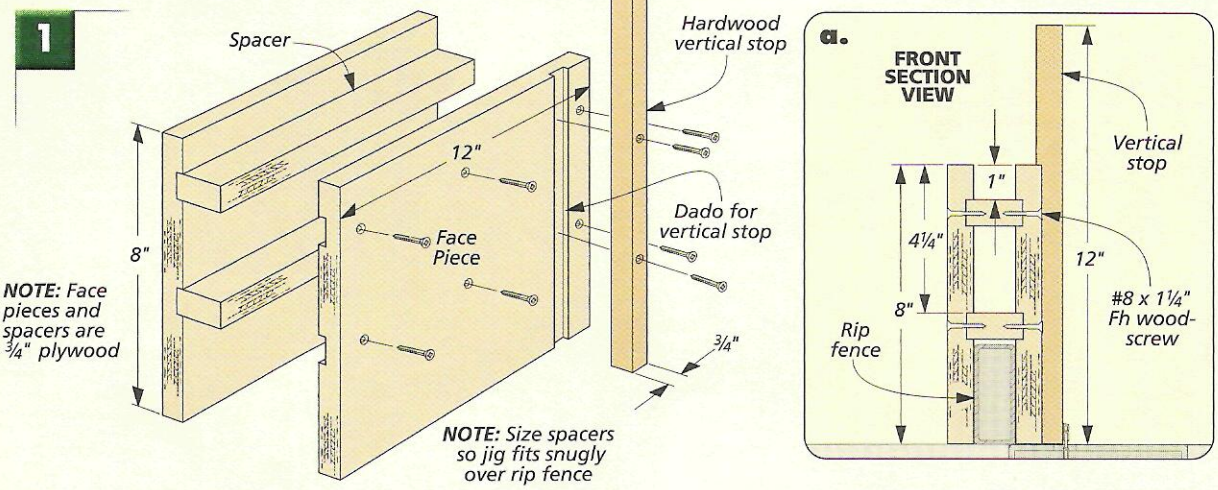

DEDICATED MITER SLED

To a seasoned woodworker, no joint makes a better impression than a clean, tight-fitting miter. It says "Hey, this person knows his stuff."

The catch is that cutting an accurate 45° miter can often be a matter of trial and error, with a little luck. But this dedicated miter sled can make accurate miters a sure thing.

Since you're only worried about one angle — a perfect 45° — that's all this sled does. Once it's set up, you'll get the same cut time after time.

ON THE MARK. And the added bonus is that you'll know right where the cut will fall. As you can see in Fig. 2, you can just line up your mark with the edge of the sled. There's no guesswork involved.

And to make the matching miter there's no need to flip the piece over and cut from the opposite side. Just move the sled to the opposite miter slot. W

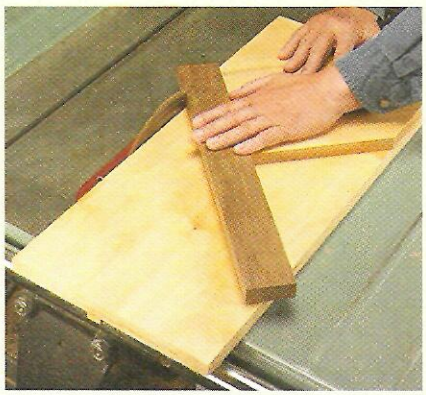

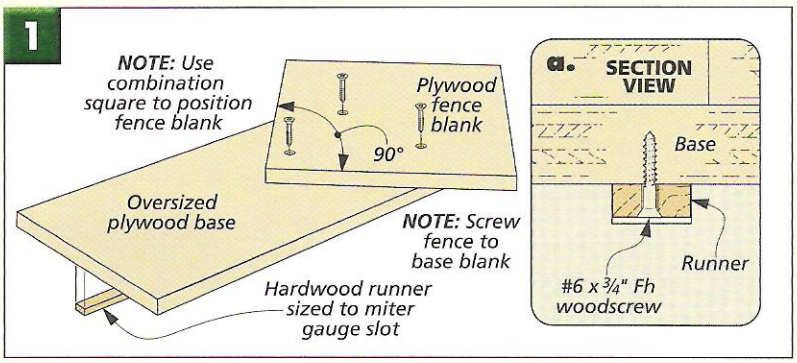

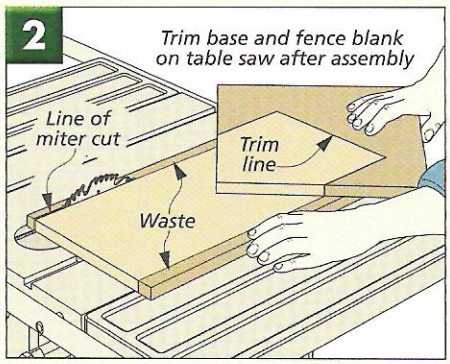

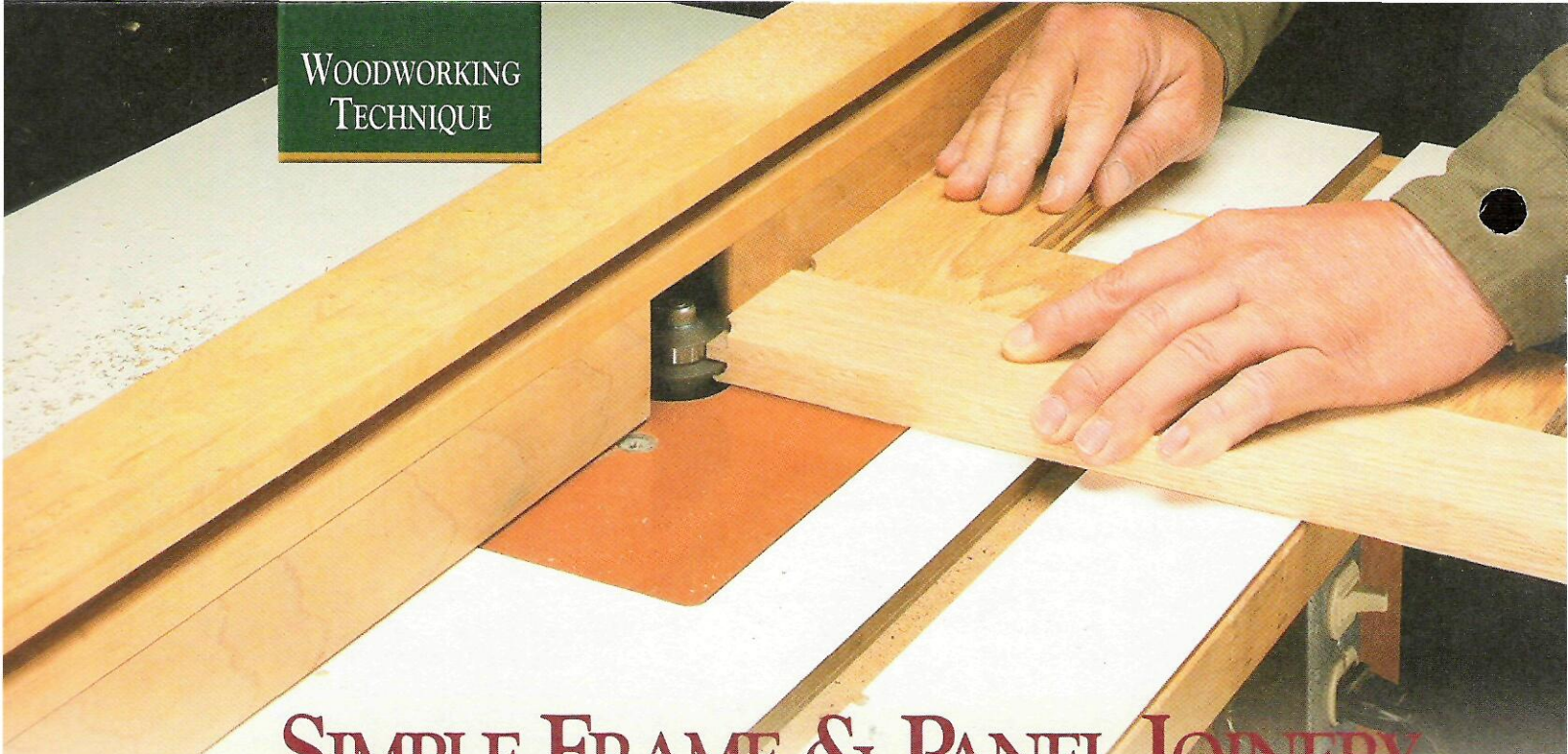

SIMPLE FRAME & PANEL JOINERY

All you need are a router table and a rail and stile router bit set for a hassle-free way to build strong, accurate frame and panel joints.

There are many joinery options available for building frame and panel cabinet doors. But if I need to make a lot of doors, like for the entertainment center, I turn to a rail and stile router bit set for fast, accurate results.

Rail and stile bit sets have a couple of things going for them. For one, there's not much to setting them up and getting great-looking results, as you'll see later. One bit cuts the tenon profile on the rails and the other cuts a mortise profile and groove to hold a panel.

Another nice thing about them is the speed. Once the bits are set up, you can make a lot of doors in a short amount of time. It's kind of like having a professional cabinet shop in your basement or garage.

The final benefit is the result. At the same time that you are cutting rock-solid joints, the bit is adding a decorative profile on one edge. In fact, if you look at the photo below, you can see how this molded edge actually becomes part of the joint.

CUSTOM-FIT BITS. As I mentioned before, the bits come as a set. The bits are made up of stacked cutters and bearings held on a ½"-dia. shank with a hex nut, see photo on the facing page. This means that you can take the bits apart and rearrange them for other tasks, see the box on the opposite page.

Now, most rail and stile sets come with a ¼"-wide cutter for routing the groove that holds the panel. But as you know, ¼" plywood usually measures a little less than that. To compensate for this, you can buy one bit set that features an undersized groove cutter. So depending on the plywood, you can end up with a much closer fit than you could with a typical ¼"-wide cutter.

SIMPLE SETUP. When it comes to using the sets, there are a few things to keep in mind. First, these bits can't be used on frame stock less than ⅝" thick. And while you're cutting your parts, it's a good idea to make a few extra for test pieces.

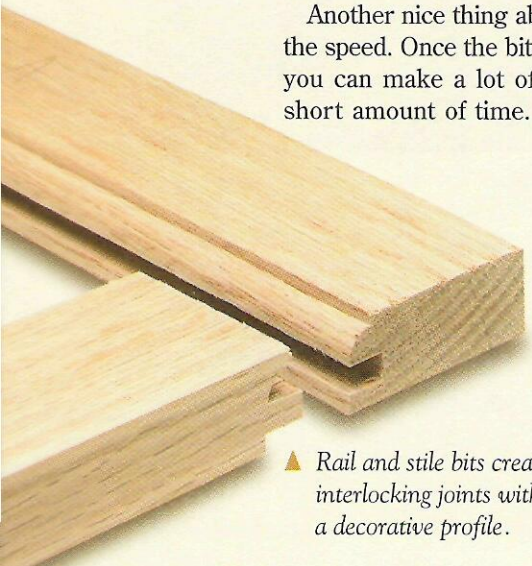

▲ *Rail and stile bits create interlocking joints with a decorative profile.*

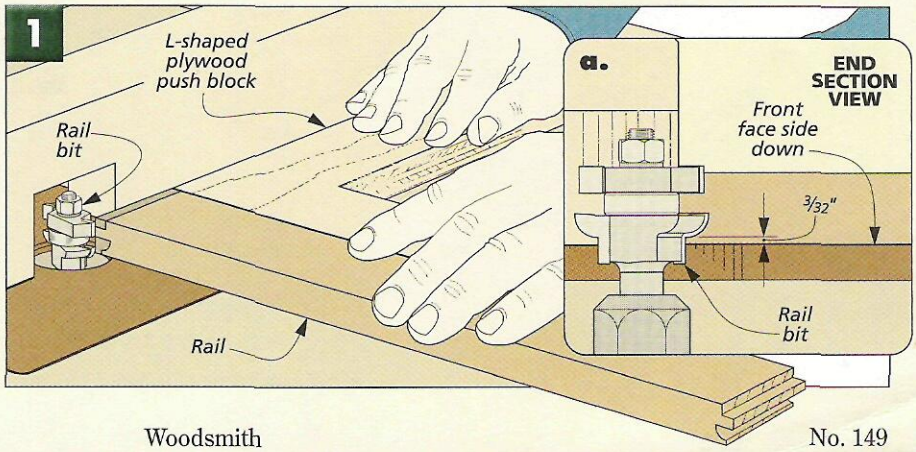

You'll find that setting the height of the bits is pretty simple. I measure from the table to the bottom of the profile cutter of the bit, as illustrated in Fig. 1a. Then rout a tenon in the end of a test piece (front face down) to check the setup.

Finally, although the bits have a bearing, you'll find it's safer to work with the router table fence set flush with the edge of the bearing.

START WITH THE RAILS. Now, you're ready to begin routing. But where do you start? I like to cut the tenons on the rails first. The reason for this is simple. If there's going to be any chipout, it'll happen on the end grain. But by routing the tenons first, some of the chipout will be cut away as the groove is routed.

One other thing you can do to prevent chipout is to back up the cut with an L-shaped plywood push block, as in Fig. 1. One leg rides against the fence to keep the workpiece square to the fence and bit. The other leg makes it easy to hold the workpiece against the push block. Once you're satisfied with the setup, you're ready to start routing the tenons on your workpieces.

ROUT GROOVES IN ALL PARTS. After the rails are routed, you can now move on to the second and final step — cutting the matching groove and molded edge with the stile bit.

Setting the height on the stile bit is even easier than the rail bit. All you have to do is set a rail next to the bit. Then adjust the bit so that the top of the tenon is flush with the top of the groove cutter, as in Fig. 2a.

After making a test cut, check the fit of the joint with the rail you used as a set-up gauge. Both pieces should be flush and the joint should fit together snugly. Then all that's left is to rout grooves in the stiles *and* the rails, as in Figs. 3 and 3a.

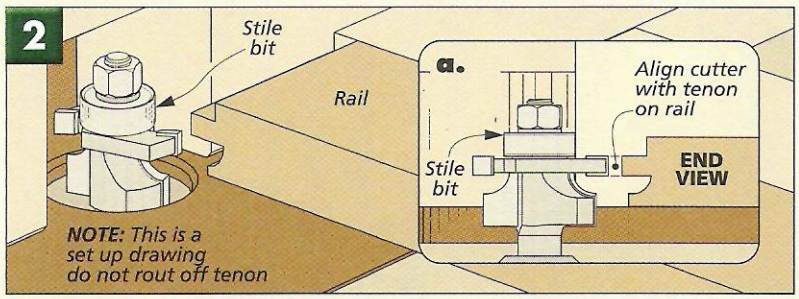

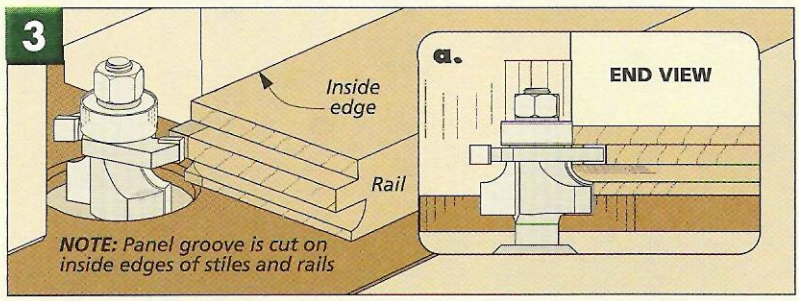

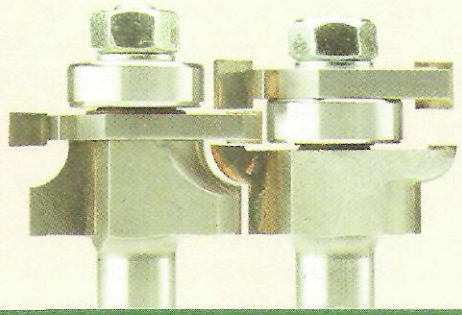

Rail and stile bit sets have a combination of cutters and bearings that make frame and panel joinery simple.

MODIFYING BITS FOR GLASS-PANEL DOORS

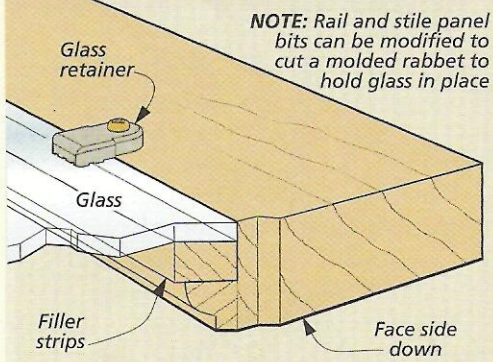

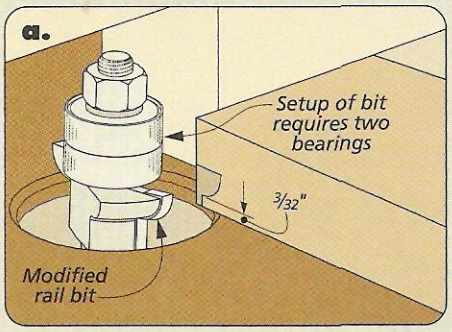

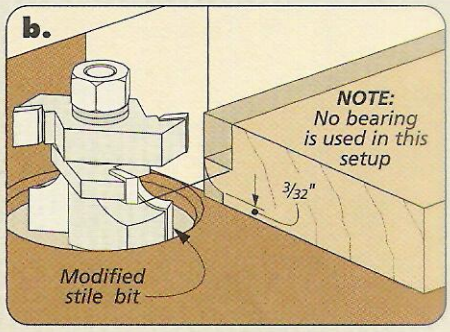

A bonus feature of a rail and stile set is the ability to change the cutting profile for other jobs. For example, when it comes to glass-paneled doors, I don't like trapping the glass in a groove. The reason is simple — if the glass breaks, there's no way to replace it. Instead, I usually set the glass in a rabbet routed in the inside edge and hold it in place with a stop or retaining clips.

To modify the bits for glass-panel doors, start by removing the nuts from both bits. Next, remove the wing cutter from the rail bit and replace it with the bearing from the stile bit, as in detail 'a.' Now when the rail ends are cut, only the reverse of the profile is removed from the workpiece.

Then to match this profile on the stile bit, add the wing cutter from the rail bit above the groove cutter, as in detail 'b.' Now, you'll want to make sure the cutting edges are offset (like a stacked dado set) and facing the right way. This bit cuts the profile as well as the rabbet for the glass.

Shop Note: Because there isn't a bearing on the stile bit, be sure to leave the fence in place when changing bits. This will keep the correct depth of cut.

FAST FINISHING

Water-based stains are the key to an easy-to-apply finish. And best of all, you can start in the morning and be done in the afternoon.

How would you like to apply stain to a project like this table in the morning, a clear top coat in the afternoon, and have it out of the shop by the end of the day? The secret behind this fast finishing technique is water-based stains and finishes.

Besides speed, water-based stains have a couple of other things going for them. First of all, they add a deep, clear color to wood. Second, there aren't any fumes that can make the whole house smell like stain. Finally, water-based stains and finishes are safer. Brushes or rags won't spontaneously combust, and all it takes to clean up is a little dish soap and some warm water.

By now, you're probably thinking that this sounds like the perfect finishing system. And it does have a lot of advantages, but there are a few drawbacks as well. First, water-based products raise the grain of the project which can leave you with a "whiskered" surface.

Another problem you may encounter is blotching and lap marks. This is caused by fast, uneven penetration. But don't worry, there are a few simple steps you can take to get rich, even color and a smooth finish.

▲ *Thick water-based stains (shown on the left) penetrate slowly giving you time to wipe off the excess. Thinner stains (right) require a wood conditioner.*

TWO TYPES OF WATER-BASED STAIN. First of all, you have to know what kind of water-based stain you're dealing with. All water-based stains have essentially the same ingredients — pigments and binders that are suspended in water. Now we all know that water soaks into wood pretty quick. That's what leads to the pigment drying before it can be wiped up. To get around this, stain makers take one of two approaches.

Most stains use a two-part process. First, you apply a wood conditioner (more on that later) to the project. The second part is brushing on the stain. These stains have a very runny consistency. They flow easily and penetrate quickly, as in the photo at left.

But I've found one stain manufacturer that approaches the problem of controlling the penetration in another way. *General Finishes EF* (Environmentally Friendly) stains are a lot thicker — about the consistency of maple syrup.

Being thicker, this type of stain doesn't penetrate as fast. So it sits on the surface of the wood longer. This gives you more time to work it across the project before wiping off the excess. While this gets around using a conditioner, the drawback is you'll end up applying more stain and you'll have to wait a few minutes longer for the full color to develop.

Preparing the Surface

Before you open the can of stain, you'll need to take a couple of steps to prepare the surface of the project.

SANDING FOR A SMOOTH FINISH. First, I sand the project one grit higher than I usually would for oil-based finishes. I'll go to 220 or 300 grit. This step further smooths and slightly burnishes the surface, which helps to even out the penetration of the stain to reduce blotching.

RAISING THE GRAIN. The next step addresses the problem of raised grain. The way wood reacts to water-based finishes is different from oil-based finishes. With water, the wood fibers swell and lift. After the water evaporates, the fibers stay raised like a five o'clock shadow. Dealing with raised grain depends on the type of stain you plan to use.

When using a thicker stain, it's a good idea to raise the grain prior to staining by lightly spraying on some water after sanding, (Step 1). Once it's dry, you can feel "whiskers" on the surface. Smooth it out with a quick pass with the same grit sandpaper used for final sanding.

DOUBLE-DUTY WOOD CONDITIONER. If you plan to use a thin stain, you can skip the water. Instead, you'll need to apply wood conditioner. The conditioner is simply a sealer that soaks into the wood and slows the penetration of stain, giving you time to apply the stain and wipe down the excess.

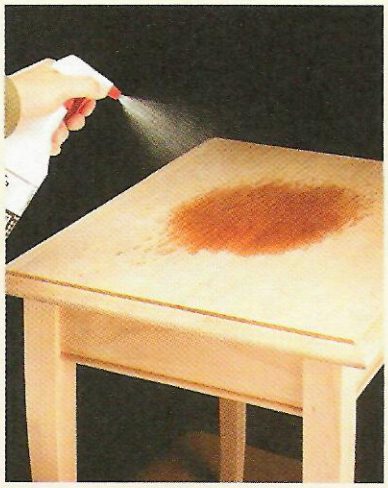

1 *To raise the grain before applying thick stain, first lightly mist the project with water. When it's dry, sand down any raised "whiskers."*

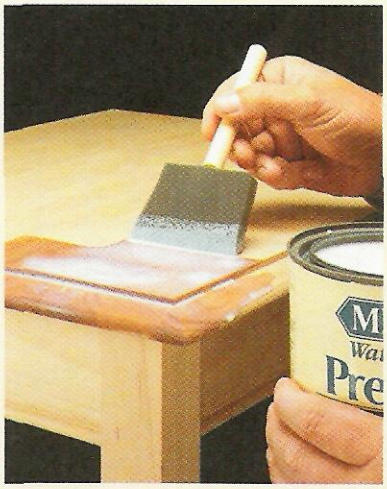

2 *For thin stains, apply a wood conditioner. This will control blotches and streaking as well as raise the grain. Then sand lightly when dry.*

And since it's water-based, it raises the grain so you can knock it down with sandpaper before staining.

The wood conditioner I used looks like skim milk, as in Step 2. Apply it liberally with a foam brush making sure to cover the entire surface. It dries clear and is ready for stain in about 30-45 minutes. Again, lightly sand off any raised grain.

APPLYING STAIN AND FINISH

With the surface smooth and the raised grain knocked down, you're ready to apply the stain. I've found that it helps to divide the project into smaller parts and stain it in stages. For example, stain the table top first, then the sides, and then each leg. This way you won't feel rushed when wiping down the excess.

BRUSH IT ON. No matter what type of stain you use, I've found a foam brush works best, as in Step 3. It lets you apply a lot of stain quickly and gets into all the corners.

You'll notice that thin stains flow faster and will cover the project quickly. When applying thicker stains, you'll have to work it around more for the best coverage.

WIPE OFF THE EXCESS. Once the stain has been applied, you'll see it start to penetrate. Now it's time to go back and wipe up the excess with a fresh brush or rag.

Although the project will feel dry to the touch in about 20 minutes, it's best to wait about 2 hours before putting on a top coat. When the stain is dry, it'll look dull and chalky. But the full color returns as soon as you apply a clear finish.

APPLYING A TOP COAT. Before applying a clear coat, there's just one more thing to do. I buff the surface smooth with a *Scotchbrite* pad. Note: Never use steel wool with water-based finishes. Leftover bits will cause rust stains later on.

Finally, I brushed on a few coats of a water-based polyurethane (Step 4). You can apply new coats in about 30 minutes. Two hours after applying the last coat of finish, the project will be dry and ready for use. W

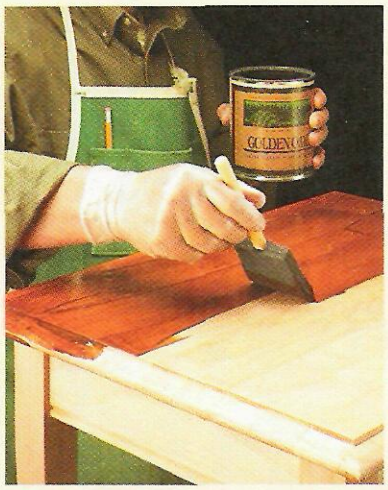

3 *Apply the stain to a small section of the project with a foam brush. Then you can wipe off the excess stain with a dry brush or clean rag.*

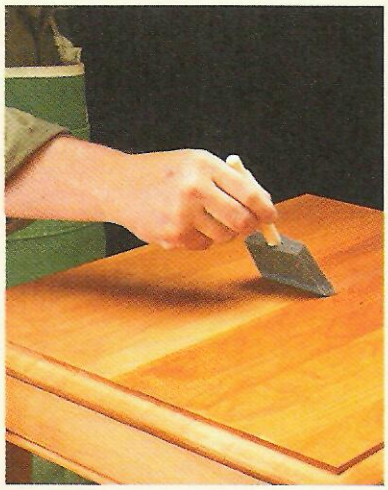

4 *In about two hours, the stain will be dry enough to apply a clear, finish coat. Although it looks dull, the clear finish will bring back the shine.*

FEATURE PROJECT

HOME ENTERTAINMENT CENTER

This oak entertainment center has it all — good looks, storage galore, and lots of convenient features. And best of all, building it will be a breeze.

Construction Details

OVERALL DIMENSIONS:
52¾"W x 29¾"D x 82"H

Two-piece cornice

Connecting frame

SPACER CLEAT

Upper shelving unit is hung with connector bolts and threaded inserts

DOOR PANEL

FRAME SIDE

1½"-dia. "bronzed" knob

UPPER SIDE

Pocket door hardware allows upper doors to slide into case

All case panels are ¾" plywood

NOTE: TV cabinet is built as an upper and lower case

UPPER CASE

NOTE: Upper case will accommodate a standard 36" TV

Ventilation provided by cutouts in back

Rail and stile panel doors

LOWER CASE

Face frame is constructed with butt joints

Cutouts allow passage of wires between upper and lower cases

NOTE: See page 34 for materials and supplies

Cutouts for ventilation and cords

No-mortise inset hinges

Catches

Adjustable shelf

LOWER SIDE

Full-length skirt on stand-alone cabinet

Doors constructed with rail and stile joinery

Skirt with simple roundover

NOTE: Case "joinery" consists of connecting frames and woodscrews

Leveler can be adjusted through access hole in case bottom

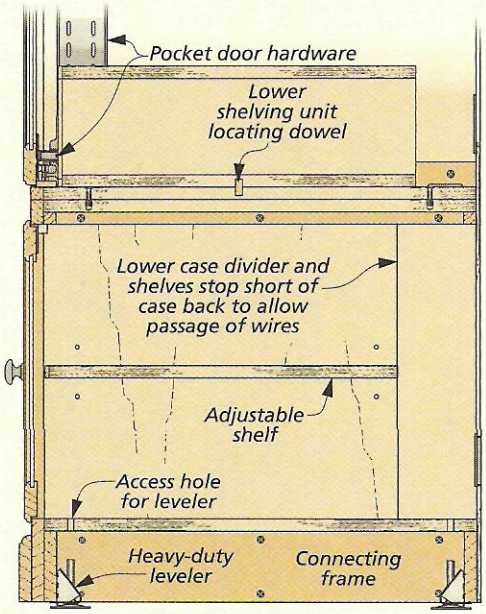

SIDE SECTION VIEW

NOTE: See page 35 for sources of hardware

NOTE: Instructions for side cabinet begin on page 30

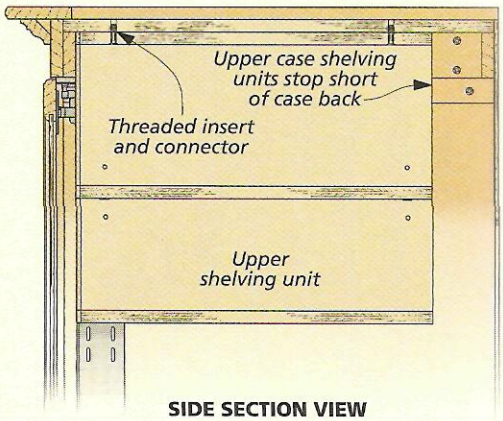

SIDE SECTION VIEW

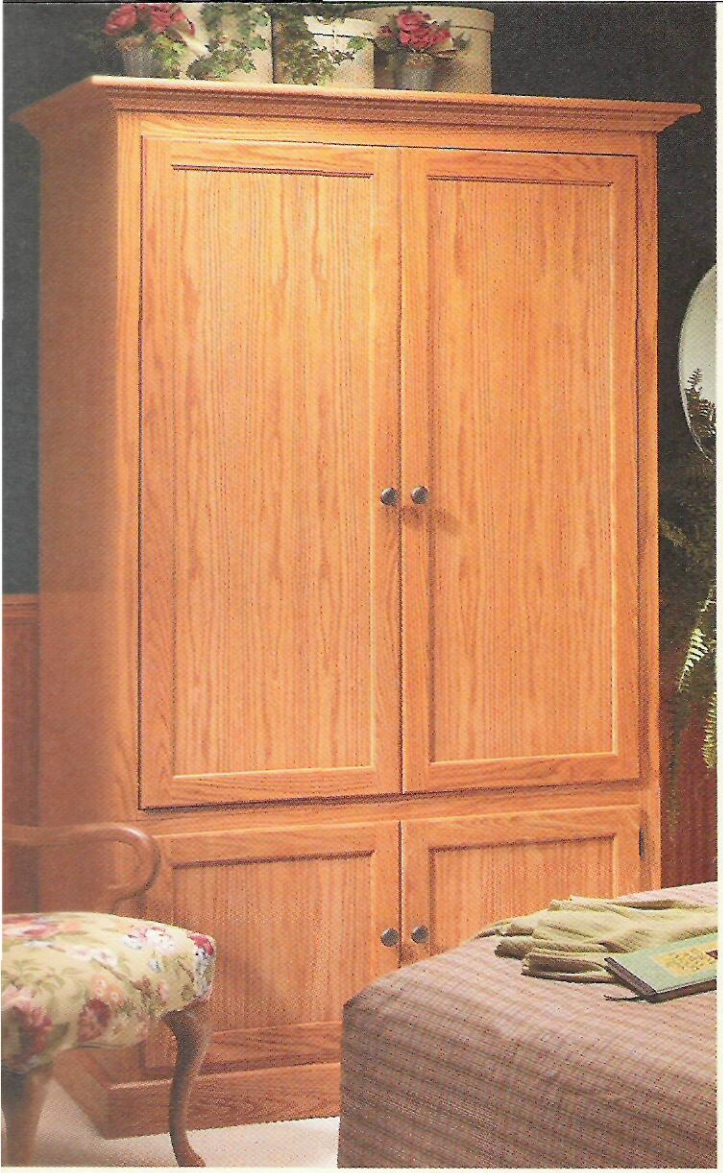

The TV Cabinet

Although the TV cabinet looks like a single unit, it's actually made as an upper and lower case. This makes it much easier to build and then to move into place once you've completed the job.

But you want it to look as much as possible like one large case. And all it takes to accomplish this are a couple of simple steps. First, cut each side of the upper and lower cases to size from the same piece of plywood. This way the grain will match and the seam will be almost invisible.

And second, you want to make certain the "footprints" of the two cases are identical. These two steps will give you a two-piece cabinet with a one-piece look.

LOWER CASE

The best place to start building is with the lower case. And I decided early on to really "strip down" the joinery. It would be too difficult to do a lot of joinery on the large plywood panels needed for the case, so I came up with an easier way. As you can see in Fig. 1, the answer is solid-wood connecting frames attached with woodscrews. This makes a very rigid case that goes together pretty quickly.

SIDES, TOP, & BOTTOM. To get started, I cut the two *lower sides (A)* to size from 3/4" plywood. Now they just need a little bit of work. First, you can cut a 1/4" rabbet to hold the plywood back and then drill the holes that will hold the metal shelf supports. That's it, the sides are completed.

Next, cut the *lower top* and *bottom (B)* to size (1/4" narrower than the sides). And the work on these pieces, likewise, doesn't amount to much. The bottom just needs a 3/8"-dia. access hole drilled in each corner (Fig.1). These allow you to adjust the cabinet levelers added later. The top also has a 3/8"-dia. hole in each corner but these hold threaded inserts used to connect the upper and lower cases. And then after making a couple of cutouts in the top to run wires through, you can begin on the connecting frames.

CONNECTING FRAMES. The connecting frames take the place of the usual dado joinery by providing lots of glue and screw surface. They're pretty basic (Fig 1).

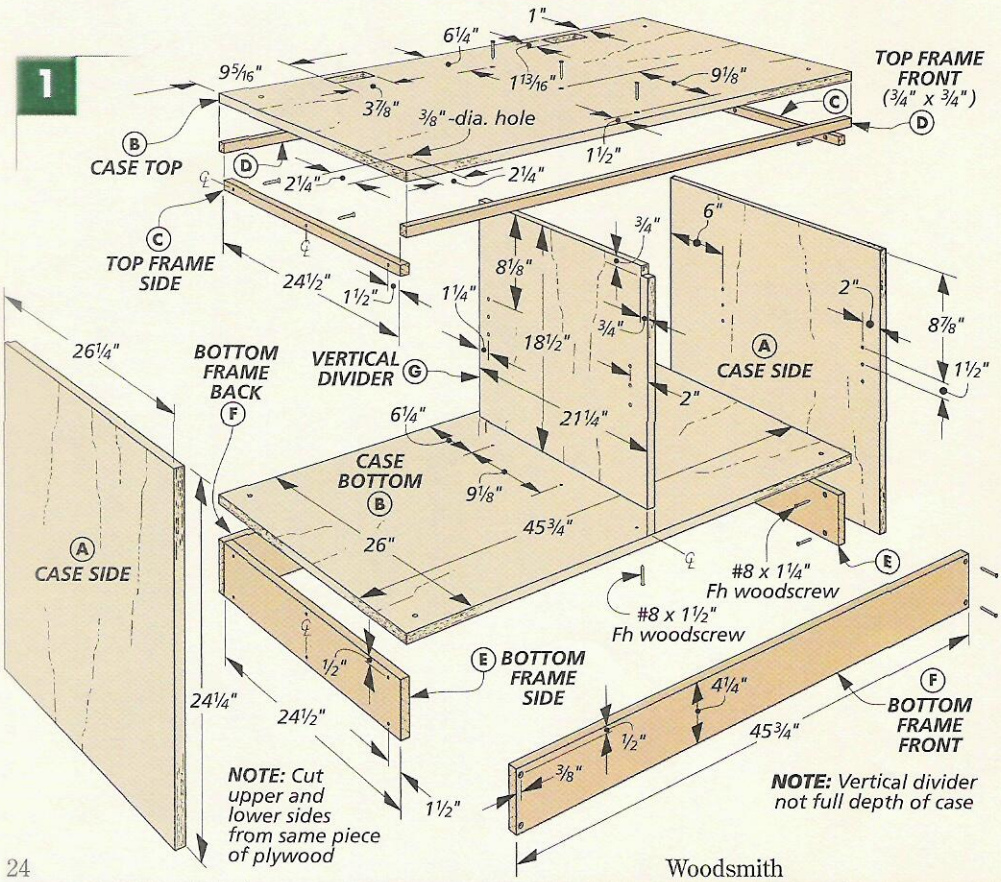

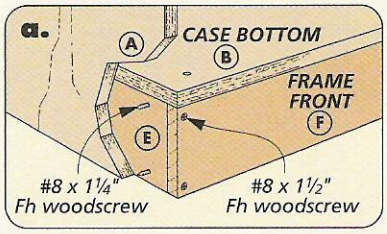

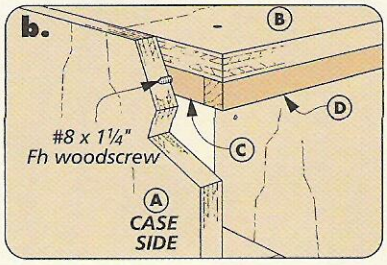

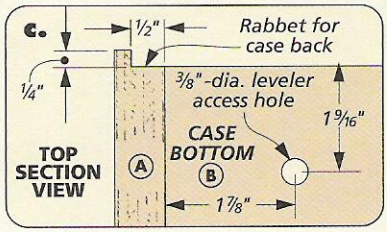

The top frame pieces can be cut to size and then glued to the underside of the case top, one at a time. But first, you'll want to drill the countersunk shank holes in the side frame pieces used to assemble the case.

The bottom frame can be assembled with woodscrews before it's glued to the case bottom.

ASSEMBLY & CENTER DIVIDER. With the "joinery" complete, you're ready to assemble the case. I decided to stand the case on end so everything would stay put during asembly.

And finally, you can add the 3/4" plywood vertical divider. It's sized to fit short of the back to allow wires to pass from side to side. Just notch it at the front, tip it into place and fasten it with woodscrews (Fig. 1).

THE FACE FRAME. At this point, the case is ready for the face frame. Like the case work, I kept it simple. No complicated joinery, just butt joints. Fig. 2 shows you all you need to know here. First, cut the two *stiles (H)* to size from 3/4"-thick stock and face-glue them to the case. Then the *lower top (I)* and *bottom rail (J)* can be cut to fit snugly in between the stiles and glued in place. A 3/4"-wide piece facing the center divider completes the face frame.

THE BACK. With the face frame in place, the 1/4" plywood back comes next (Fig. 2a). I saved some work here by roughing out the vent cutouts with a jig saw and then using a template and a pattern bit to smooth them (right margin).

THE SKIRT. A simple skirt trims out the bottom of the case. But as you can see in Fig. 3, it's a little unique. Notice how the sides pieces are cut short with an inside miter at the back. These "return" miters will match up with the mitered ends of the side cabinet front skirts. (Note: For a stand-alone TV cabinet, the side skirt pieces are full length).

SHELVES. Now after a couple minor details you'll be ready to move on. First the case needs a couple of edged plywood shelves (Fig. 3). And like the vertical divider, the shelves aren't full depth.

ADD LEVELERS. A cabinet this size needs an easy way to be set "on the level." The heavy-duty mechanical levelers I installed filled this need.

Figs. 3a and 3b show how they fit over the bottom edge of the lower frame. The levelers are held in place with woodscrews. Just make sure the stems are in line with the access holes in the bottom of the case.

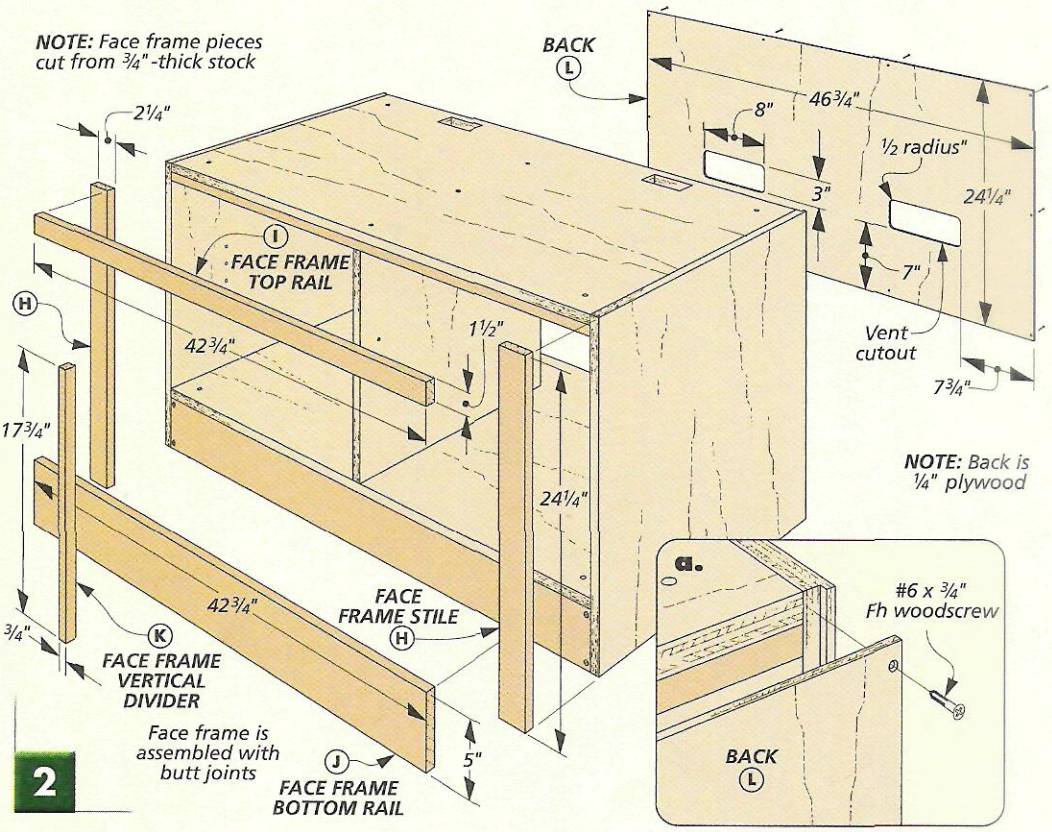

A pattern bit and a hardboard template held in place with carpet tape is a great way to trim the vent holes in the back to size.

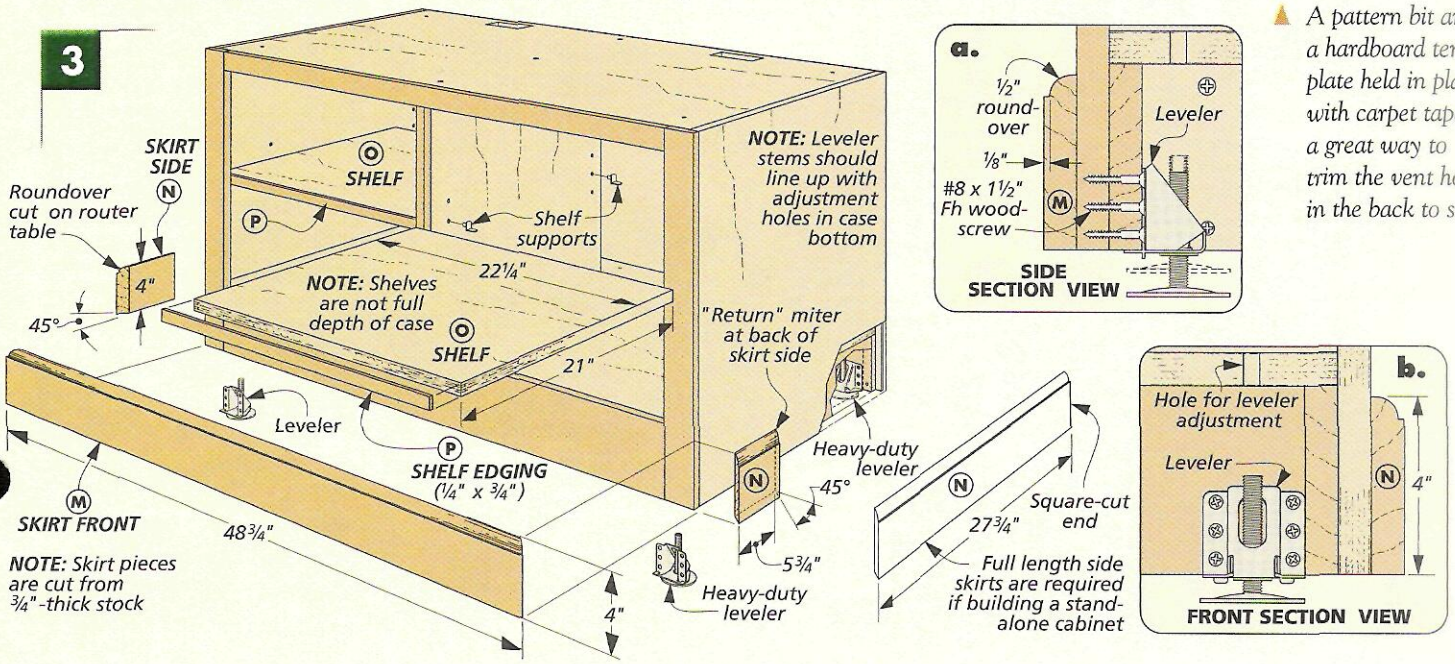

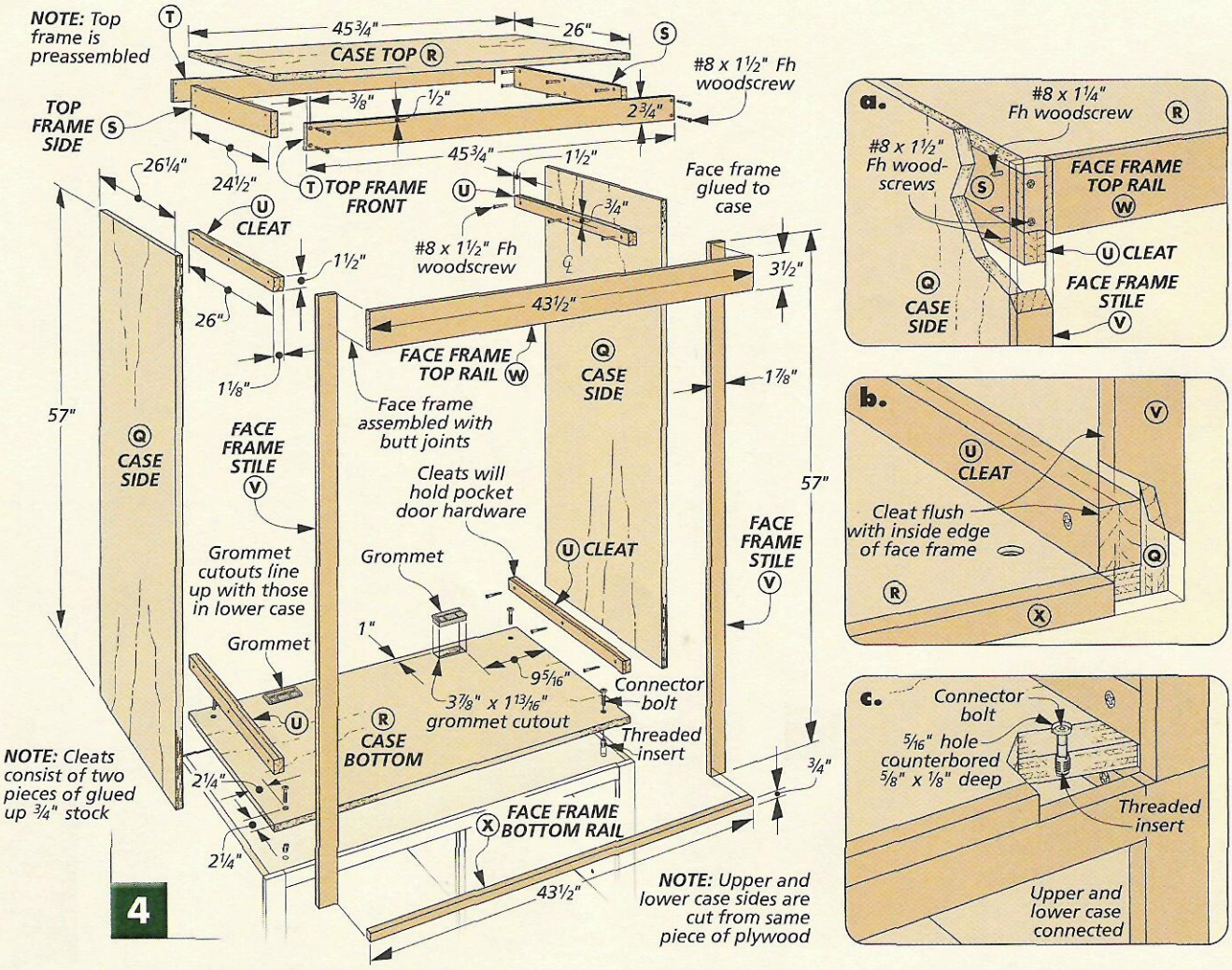

The Upper Case

Once the lower case is completed, you can move right along to the upper case. Again, the construction is pretty simple. Just a connecting frame, some cleats, and a few woodscrews will make it go quickly.

PLYWOOD CASE AND FACE FRAME. Building the plywood case with the face frame is pretty much a repeat of the lower case. Take a look at Fig. 4, and you'll get the idea. But I will point out a couple of differences.

First, on the upper case, the wider, preassembled connecting frame is fit at the top, not the bottom as in the lower case. And at the bottom of the case, I just used a 1⅛"-thick *cleat (U)* along each side (Fig. 4b). These cleats do double duty. First they provide the "joinery" at the lower end of the case. And, along with an identical pair mounted under the top frame, they allow you to mount the pocket door hardware flush with the face frame.

There's another difference that you may not notice. The stiles of the upper face frame are a bit narrower than those on the lower case to accommodate the pocket doors.

And there are a few more details to remember. First, there are some cutouts for wire grommets in the case bottom that line up with those in the lower case top. And Fig. 4c shows how threaded inserts hold the upper and lower cases together.

A GOOD MATCH. For the best look you'll want to take a little extra time to make sure the width and depth of the two cabinets are identical.

And finally, you might recall that I cut each side of the upper and lower case from a single sheet of plywood. This will give you a perfect grain match and an almost invisible seam between the upper and lower cases.

CORNICE MOLDING. Once the case and face frame are assembled, you can add the two-piece cornice molding around the top. Figs. 5 and 5a show how this works.

You can start by applying the cap. After cutting the *cornice cap (Y, Z)* pieces to size and routing a simple bullnose, the pieces are mitered and then glued and screwed in place.

I picked up some stock crown molding to add below the cap. It's just mitered to length and then glued and nailed in place.

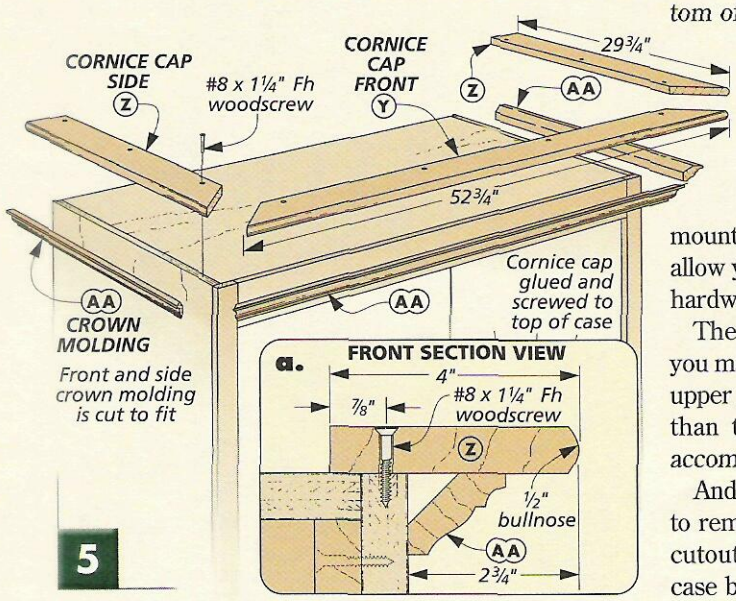

A "Professional" Door

I wanted the cabinet doors on this project to have a "professional" look. The style I settled on was a 3/8" inset, rail and stile panel door. They have a simple roundover with a shoulder on the inside and outside edges.

INSET DOORS. But before you get started, these doors need a little explanation. I originally intended to fit all the doors with a 3/8" inset. This just means that the doors have a 3/8"-square rabbet cut around the outside edge as shown in Fig 6c. This leaves a lip that allows them to sit half inside and half over the face frame. It's a common style and I built the two lower doors this way.

POCKET DOORS. But this style won't work for the upper pocket doors. They need to fit *inside* the face frame so they can slide into the case. So here I made a change.

I just eliminated the rabbet around the outside of the doors (Fig. 6a). But the narrower upper face frame still allows both sets of doors to be the same width. So even though the upper and lower doors are a bit different, once they're installed you'll never know.

RAIL AND STILE JOINERY. Fig. 6 gives you the basics on the upper and lower doors. It's pretty straightforward. I didn't want building these doors to be a chore, so I picked up a rail and stile router bit set to speed things up. And boy, did it. With one of these sets you can cut the joinery for these doors in short order. The article on page 18 tells you all you need to know about this.

RABBET AND ROUNDOVER. Once the doors are assembled, cutting the 3/8"-square inset rabbet on the lower doors and the roundover on all the doors will complete the work. First, I routed the roundover on all the outside edges (Figs. 7 and 7a).

Next comes the rabbet. Figs. 8 and 8a show how to do this with the dado blade on the table saw. And I should mention that you do need to cut a rabbet in the center stiles of the two upper doors (Fig. 6b). These rabbets capture the astragal. This thin strip just fills the gap and keeps the doors in line.

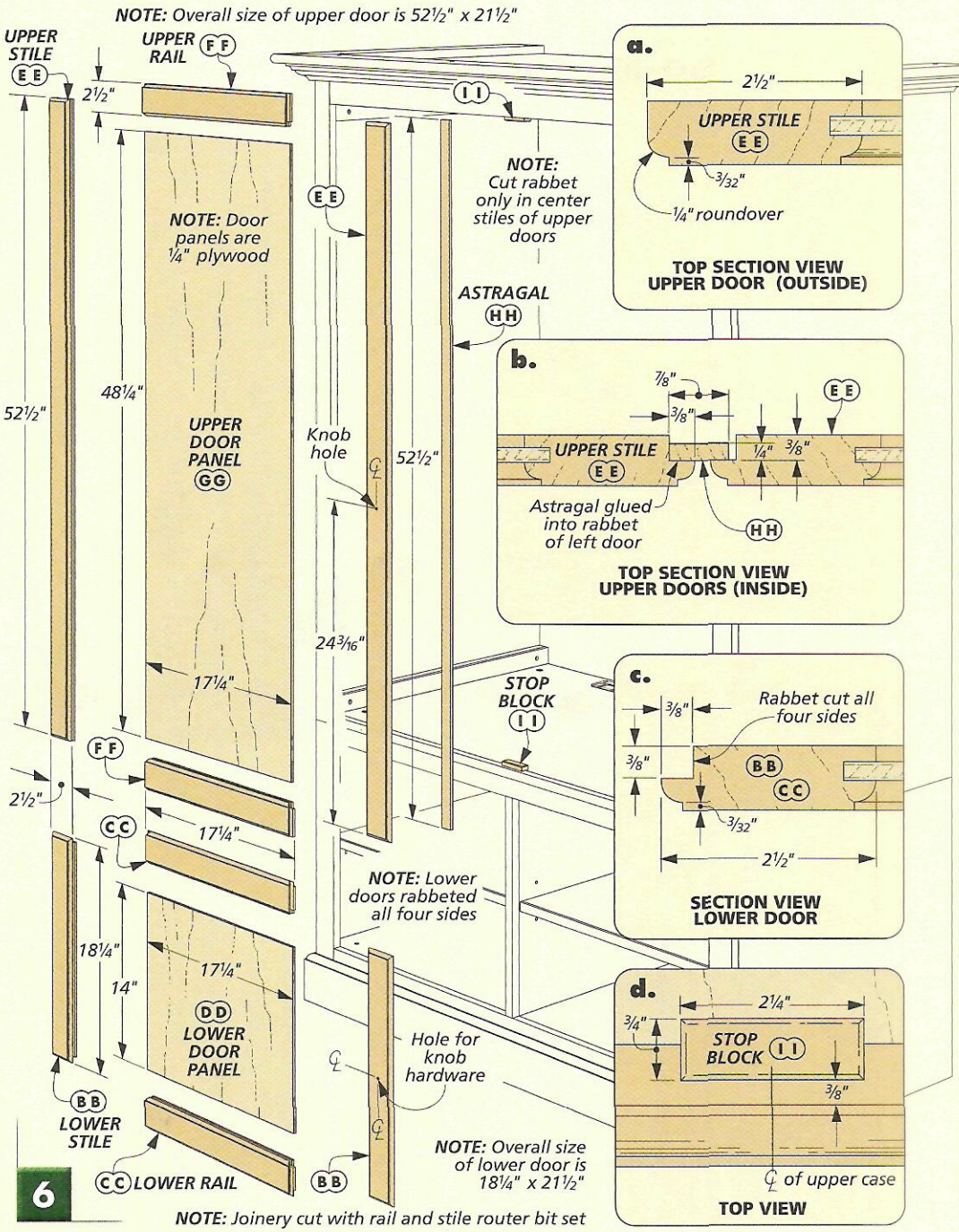

6

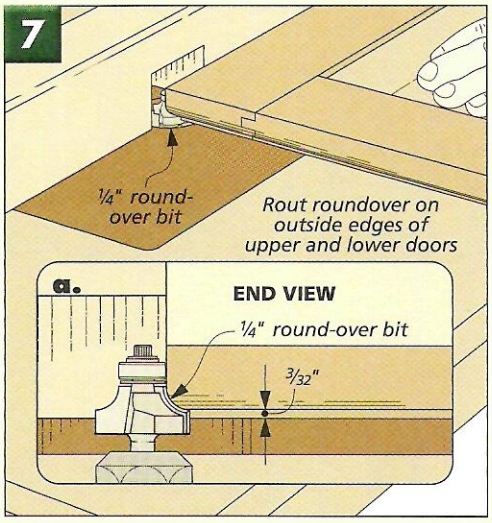

7

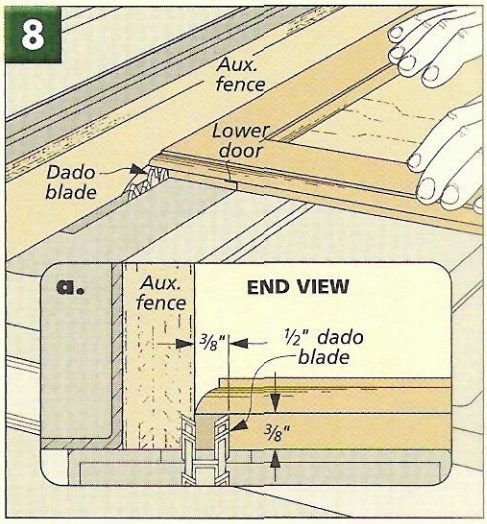

8

Installing The Doors

Now that you have the four doors ready to go, the next step is to install them. And obviously you're going to use a different method for the upper pocket doors and lower inset doors.

LOWER DOORS. The inset hinges used on the lower doors make this installation pretty straightforward. There's no mortising involved and the hinges have some slotted holes that allow minor adjustments for a perfect fit. Figs. 9 and 9a show you where to locate the hinges, knobs, and magnetic catches.

POCKET DOORS. The upper pocket doors are going to be a little more involved, but it's nothing to worry about. And once they're installed, they work great. The box below gives you a few pointers.

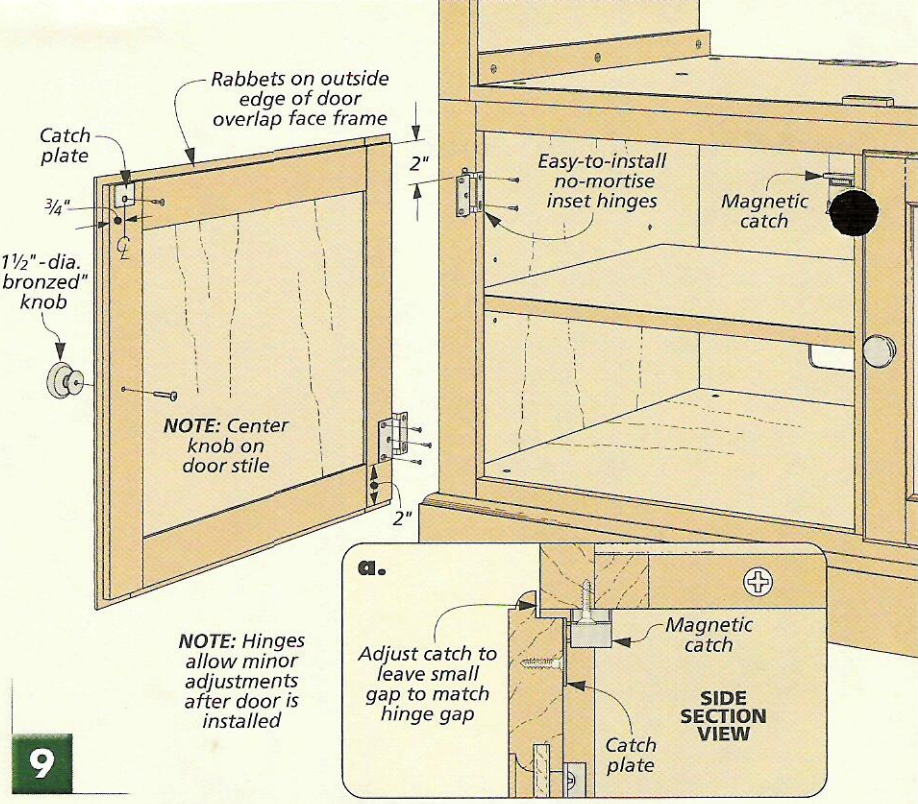

9

POCKET DOORS

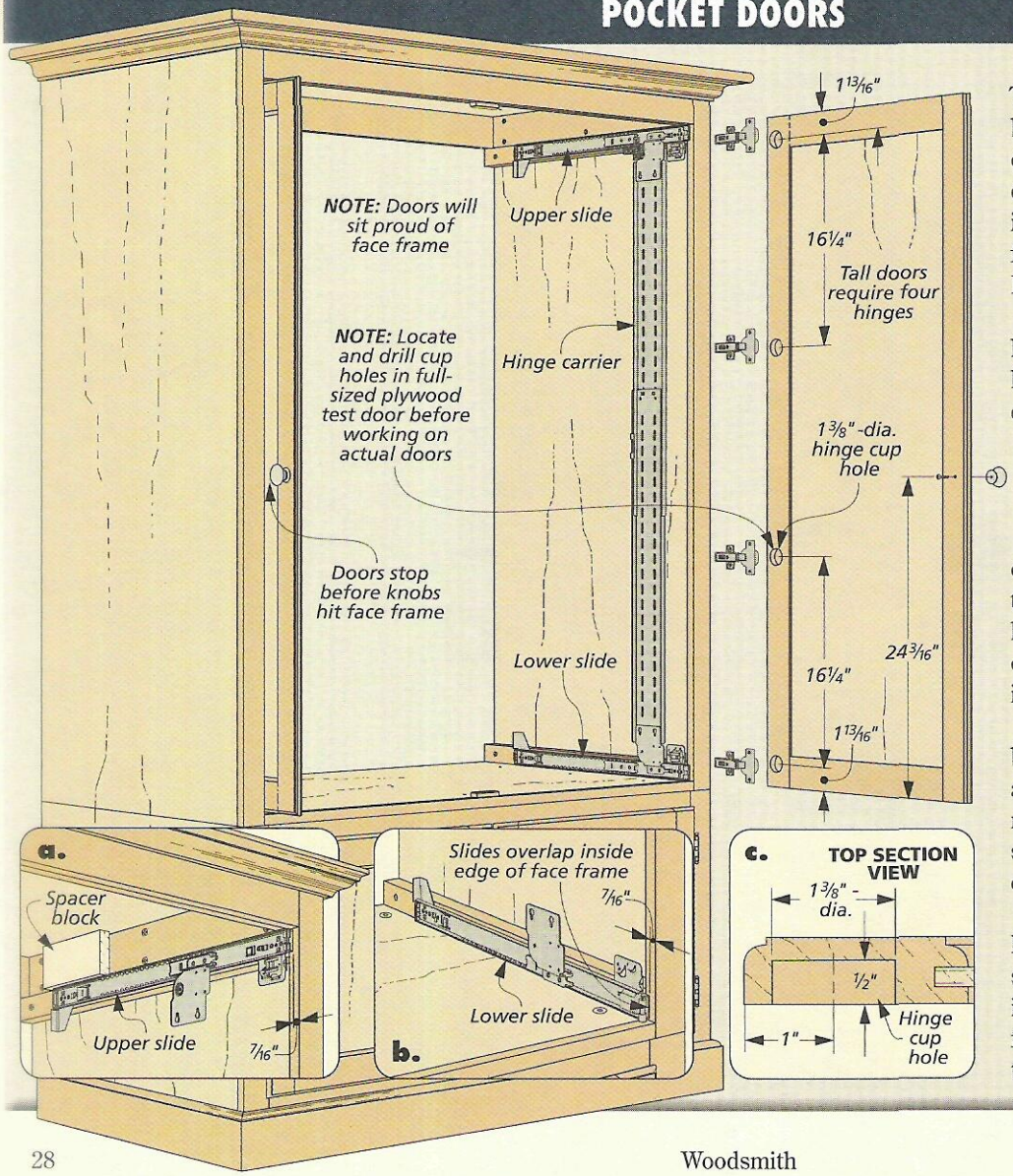

These pocket door hinges may appear to be awfully complicated to install. But I didn't find this to be the case. They're designed to be user friendly and the instructions are thorough and easy to follow. So I won't get into the details but I will point out a couple of things.

POSITION. The only real trick to this hardware is getting all the pieces, holes, etc. positioned correctly. The doors are sized to have plenty of clearance (⅛" all around), so if this is done right, they should fit nicely.

Details (a) and (b) show where to position the slides at the front. They overlap the edge of the facing so that the doors will stand proud like the lower inset doors. This is a little different than the applications shown in the instructions, but it's not a problem.

And it's important that the two slides be parallel for smooth operation. Since a 22" slide doesn't span the upper connecting frame, I used a temporary spacer block to help position the back end of the upper slide (detail 'a').

TEST DOOR. Finally, make sure the cup holes in the doors end up in the right spots. The drawings at left give you this information. To ensure success, I cut a full-sized, plywood, "test" door and fitted it before working on the real thing.

Adding Some Shelves

There's plenty of room in the upper cabinet for some shelving. So I built an upper unit to hang from the top of the case and a lower unit that also serves as a TV platform.

If you take a look at Fig. 10, you'll see how they go together. They're just "rabbeted" plywood boxes with solid wood edging. I added a center divider to the lower unit and an adjustable shelf to the upper unit. And note that both units aren't the full depth or width of the case.

JOINERY. The joinery on these two units is pretty basic. I started by cutting the plywood parts to size and then I put a dado blade on the table saw. It will make a quick job of the joinery work. And here, I cut the joinery before edging the plywood. Adding the edging after the boxes are assembled will hide the joinery.

When the joinery is complete, the boxes can be assembled with glue and woodscrews (Fig. 10a). Add the 1/4"-thick edging to the fronts and they're ready to install.

INSTALLING THE SHELVES. As you can see in Fig. 10b, the upper unit is hung with threaded inserts installed in the case top and connecting bolts that pass through the shelving unit. The lower unit doesn't need to be fastened down. It rests on a couple of 1/2" locating dowels (Figs. 10a).

PLYWOOD BACK. Adding the 1/4" plywood back wraps things up. As you see in Fig. 10, it has a good-sized cutout at the bottom to provide ventilation. And with the back in place, you can start thinking about the side cabinets on page 30.

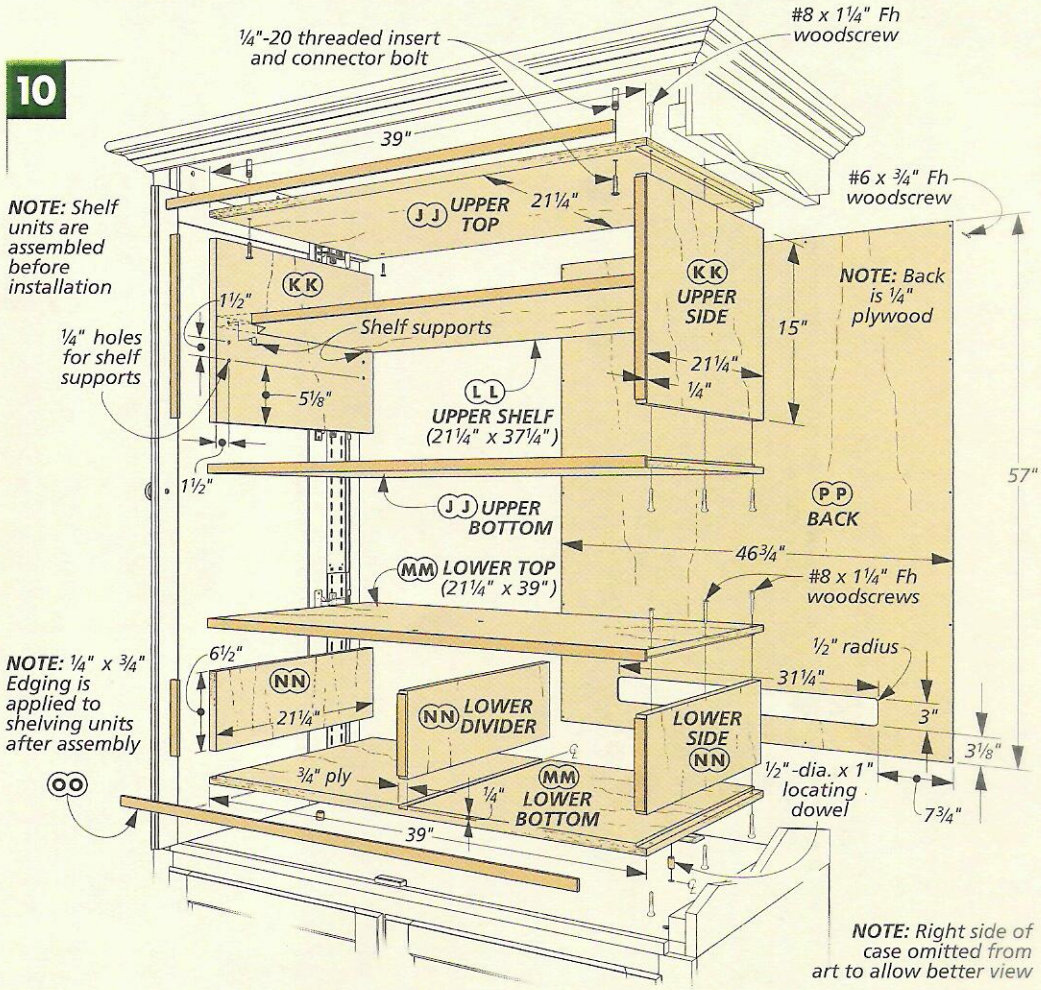

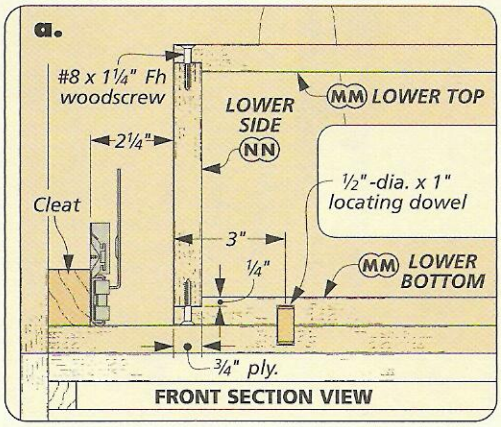

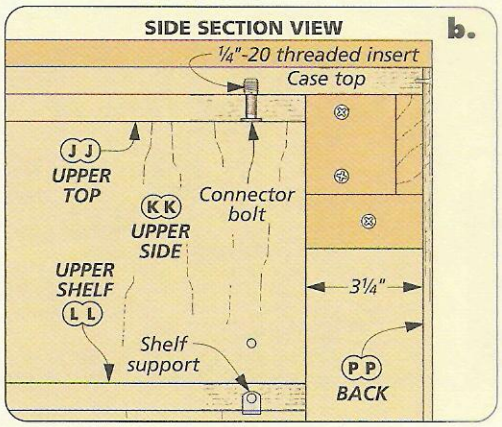

CUTTING DIAGRAM - TV CABINET

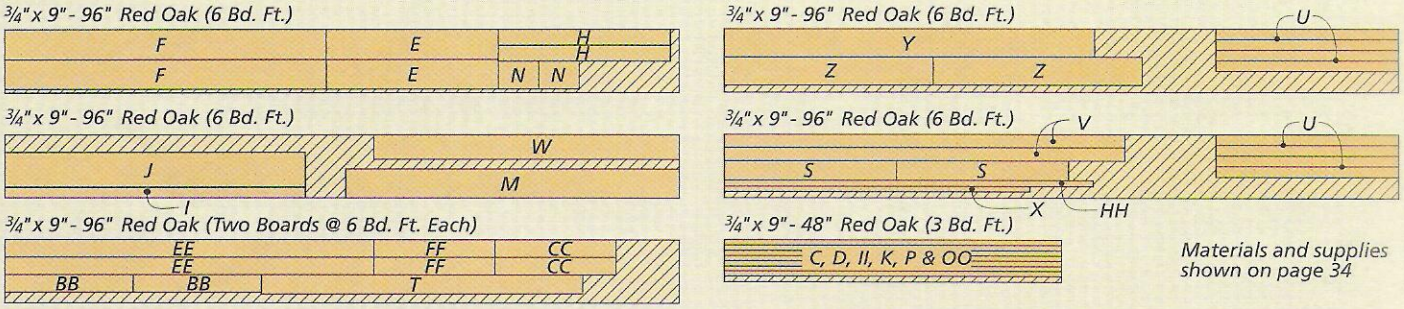

Materials and supplies shown on page 34

ALSO NEEDED: Four - 48" x 96" sheets 3/4" red oak plywood; Two - 48" x 96" sheets 1/4" red oak plywood; 120 lineal inches crown molding

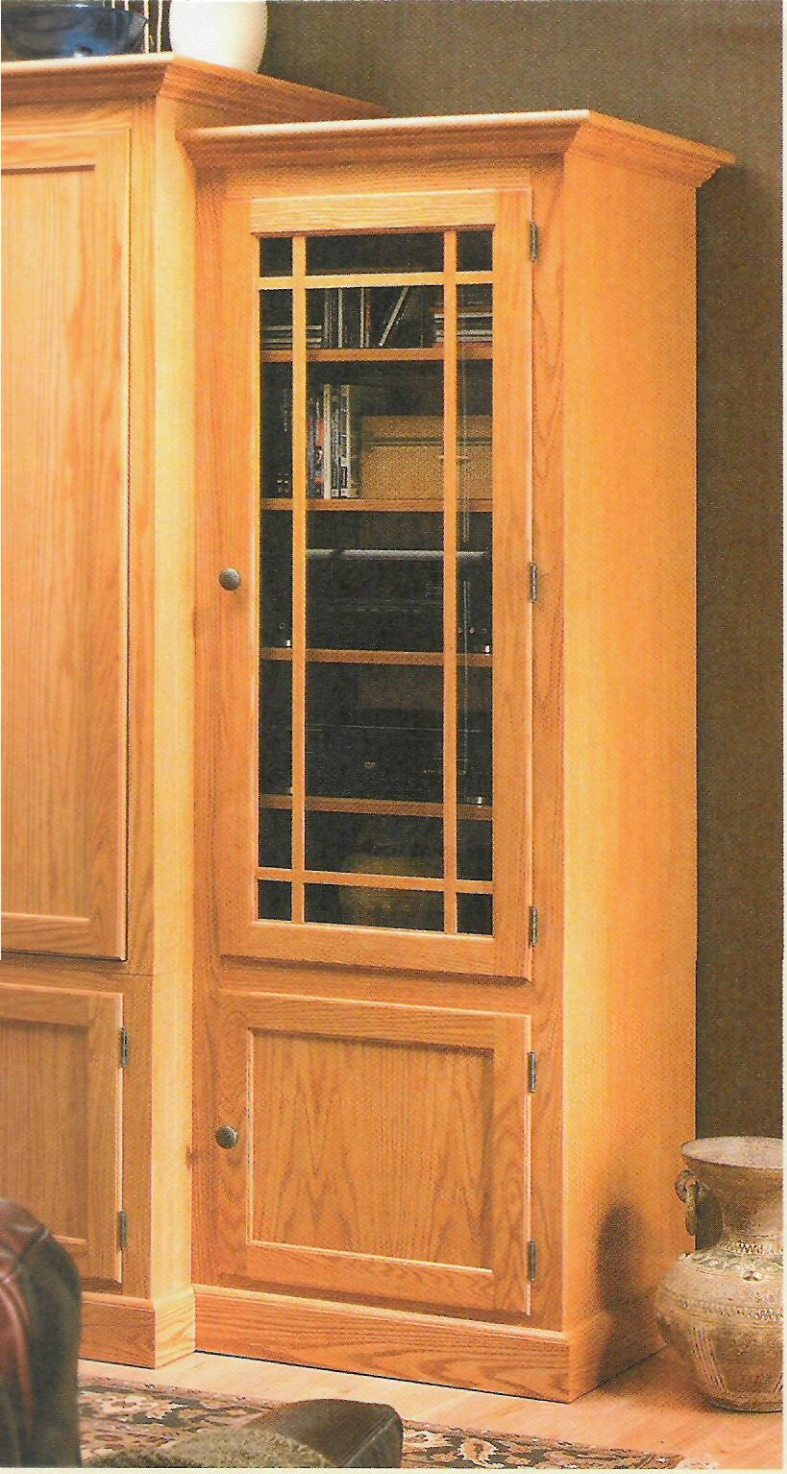

Glass Door Side Cabinet

The divided-light glass door really sets the side cabinet apart. But with simple joinery, it's easy to build.

It's easy to see what makes the side cabinets of the entertainment center so special. The traditional look of the divided-light glass doors is only a small detail. But it's the one thing that makes all the difference. They give the entire entertainment center a much more impressive look.

These cabinets can be built as stand-alone pieces and are perfect for displaying books and art objects. Or the ample storage space inside will easily hold a "ton" of components. Maybe a little of both as shown in the photo at left. When added to the TV cabinet, they make the whole entertainment center a more versatile piece of furniture.

Just like the TV cabinet, there aren't any stumbling blocks. I've used simple joinery for the case and even the stylish doors go together easily. You'll learn a thing or two along the way and enjoy the results when you're done.

THE CASE WORK

I began work on the side cabinets by "piecing together" the large plywood cases. These cases are built with the same simple technique as the TV cabinet. But since you might be building this unit as a stand-alone piece, I'll go through the process again and mention all the important details.

When you take a look at Fig. 1, you'll see that there's no joinery involved. The case panels are "joined" by connecting frames, woodscrews, and glue. It couldn't be easier.

SIDES. You want to begin work on the case with the two 3/4" plywood *sides (A)*. Once they're cut to size, all you need

CUTTING DIAGRAM - ONE SIDE CABINET

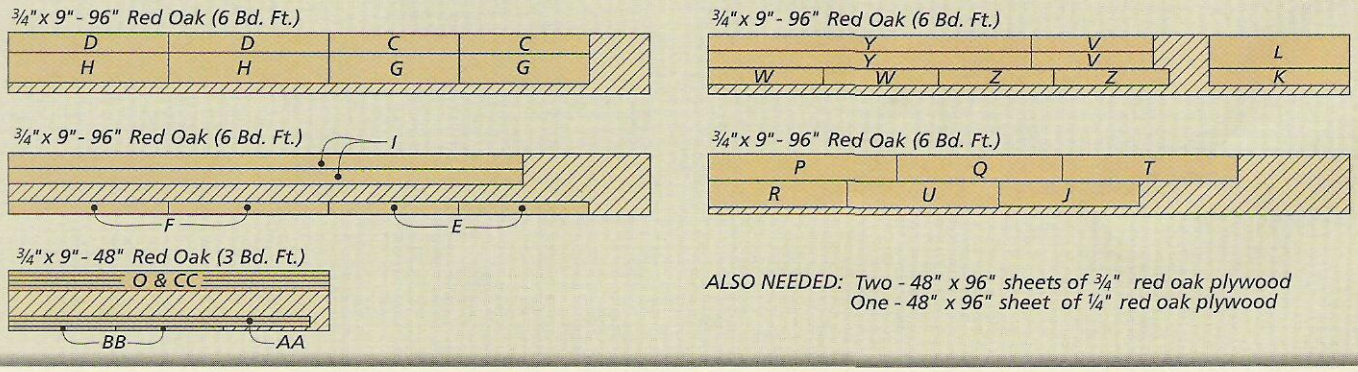

ALSO NEEDED: Two - 48" x 96" sheets of 3/4" red oak plywood
One - 48" x 96" sheet of 1/4" red oak plywood

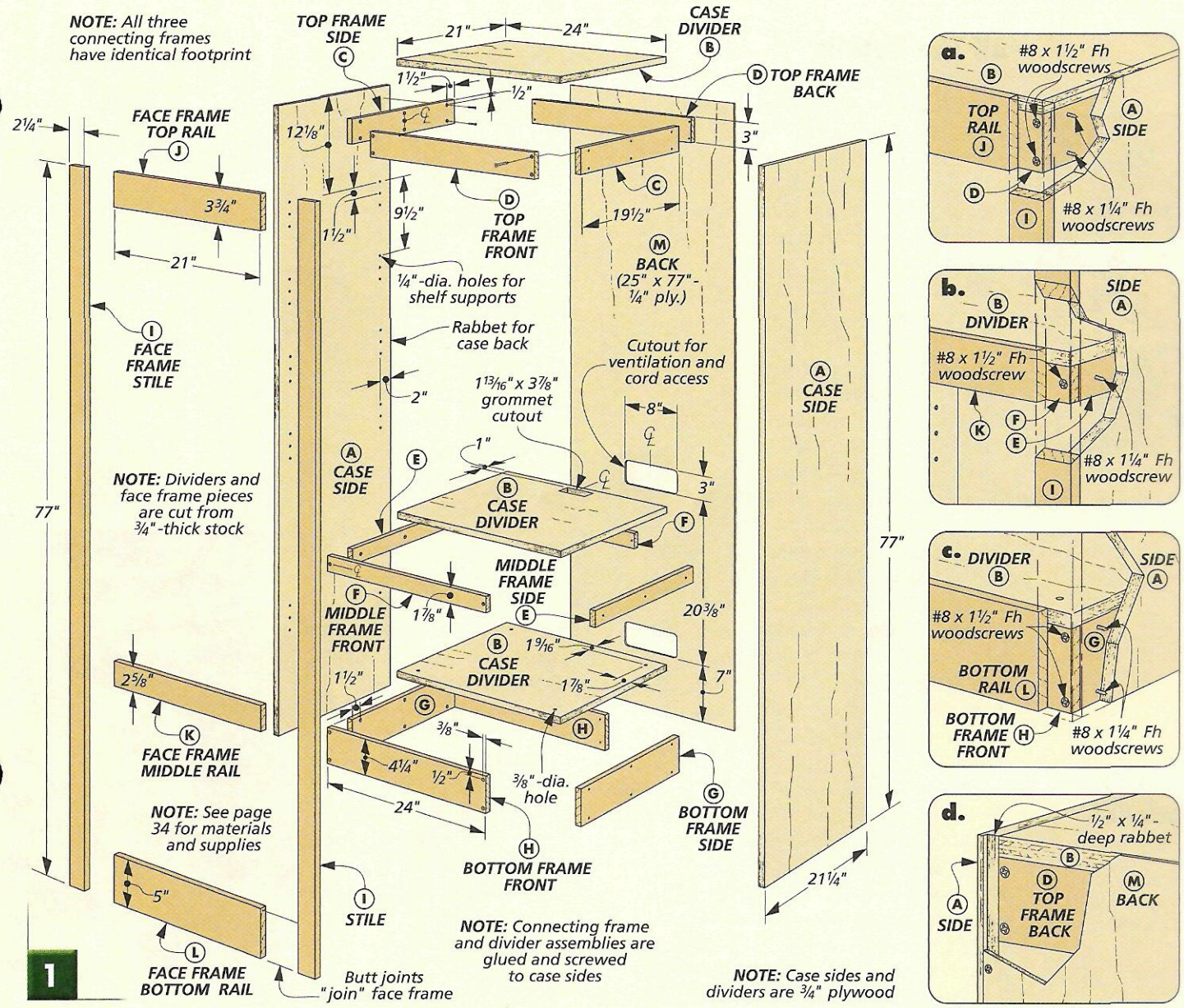

to do is to cut a rabbet for the ¼" plywood back. Then drill a series of ¼"-dia. holes for the shelf supports, as shown in Fig. 1.

DIVIDERS. Now cut the three *dividers (B)* to size from ¾" plywood. Note that the dividers are cut ¼" narrower in width than the sides. Just take a look at Fig. 1d, and you'll see how the back panel will overlap these dividers.

Before you start work on the connecting frames there are a couple things to do. First, ⅜"-dia. access holes are drilled in each corner of the bottom divider (for leveler adjustment). And the center divider has a grommet cutout at the back.

CONNECTING FRAMES. With the dividers ready to go, you can start on the three connecting frames that are added beneath the dividers. Along with some woodscrews and glue, these hardwood frames serve as the joinery for the case.

First you want to cut the frame pieces to size. Each frame is a different height, but when they are assembled, they should each perfectly match the size of the dividers.

Before gluing the dividers to the frames, you'll want to drill some holes in the frame sides (Fig. 1). These countersunk shank holes are used for the woodscrew "joinery."

PUT IT TOGETHER. After the frames are glued to the dividers, the case can be assembled. Figs. 1a, 1b, and 1c show how this works. I found that it goes a lot smoother with the case lying on its side. This way you can easily position the frames and they'll stay put while you apply glue and set the woodscrews.

FACE FRAME. Once the case is assembled, applying the face frame is an easy job. Again, there's no joinery, it's just "cut and butt." First, I cut the two *stiles (I)* to size and glued them to the case. And then the face frame rails can be cut to fit in between and glued in place.

BACK. Once the face frame is added, all that remains to complete this stage is the ¼" plywood back. But before you screw the back in place (Fig. 1d), it needs a couple of vent cutouts. A template and a router with a pattern bit is my choice for this job (see page 25).

All The Details

Once the case work is completed there are a few loose ends to tie up. I started with the adjustable shelves.

SHELVES. Just cut the five plywood *shelves (N)* to size and apply the edging (Fig. 2). Each shelf has a cutout for wires (margin photo).

ADD THE TRIM. Next I worked on adding the skirt and the cornice. The only thing unusual here is that they have to be fit to join with the TV cabinet. If you're building the side cabinet to stand alone, check out the online extras.

CORNICE. You can start with the simple cornice. Figs. 2 and 2a show the details. Since the side cabinets are not as tall as the TV cabinet, these pieces will just butt up to it.

First, comes the bullnose *cap (P, Q)*. The pieces are cut to size, routed and mitered to length. Then they can be screwed in place along with the *cornice filler (R)*. Next the crown molding is cut to fit underneath and glued and nailed in place.

SKIRT. The skirt goes pretty quickly. I cut the *skirt front (T)* and *skirt side (U)* to size from ¾" stock and then took the pieces to the router table. After routing the simple roundover on the top edge, the two pieces can be mitered to length (Fig. 3). The inside end of the front piece will need a "return" miter.

LEVELERS. Once the skirt is glued in place, you can add a leveler to each corner of the case. Just be sure to line up the leveler stems with the access holes (Figs. 3a and 3b).

ONE CABINET. At this point you can fasten the three cases together into one large cabinet. Four connector bolts and cap nuts on each side will do this job (Figs. 4 and 4a).

DOORS

Last of all, adding the doors will complete the cabinet. The lower panel door is identical to the lower doors on the TV cabinet, so you can refer to page 27 and the article on page 20 for the information you need.

The upper divided-light glass door is a little more work, but it's definitely worth it. The article on the following page tells how to "piece together" this classic look.

▲ *A hardboard template and a router with a pattern bit are a great way to smooth cutouts.*

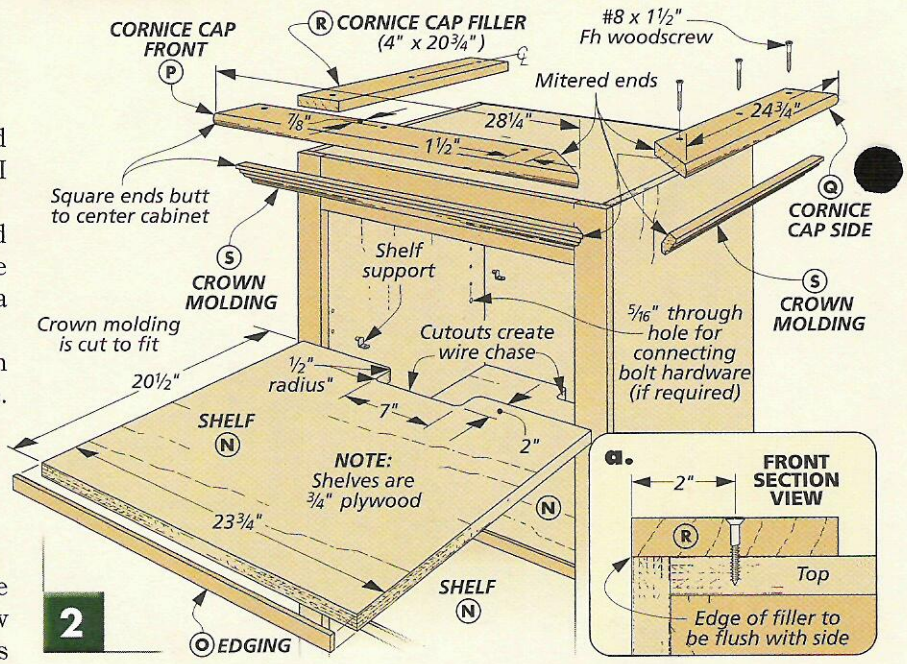

2

▲ *The lower frame and panel inset door for the side cabinets are identical to the lower doors of the TV cabinet.*

Woodsmith GO ON-LINE EXTRAS

To see how to build this cabinet as a stand-alone display case, visit our website at woodsmith.com

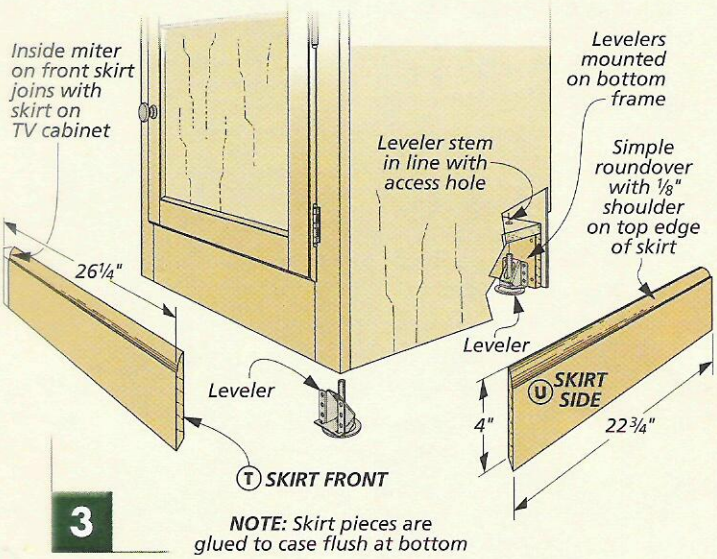

3

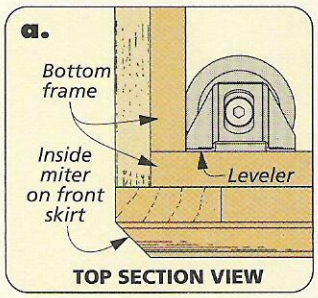

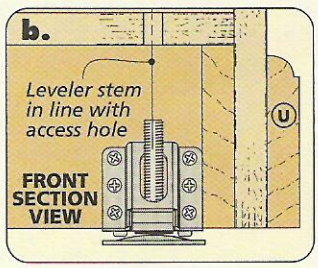

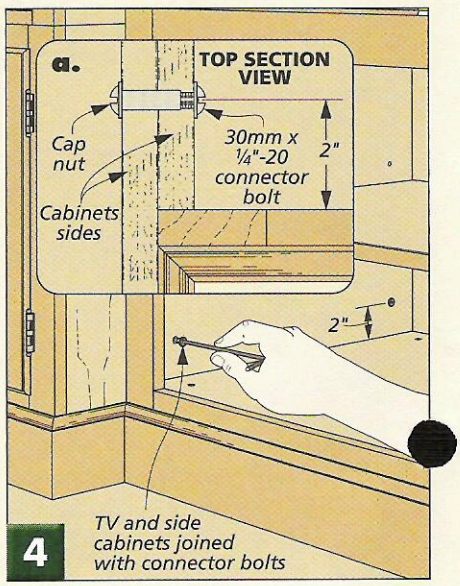

4

A Divided-Light Door

This classic style doesn't have to be difficult to build.

I've always admired the look of a well-made, divided-light glass door. This style of door shows a little higher level of craftsmanship. The builder is willing to go the extra mile to add a bit more detail to his work.

But you might think that a divided-light door would be quite a challenge to build. Not so with this door. It's designed to go together easily, but still capture the "style."

If you take a look at the Exploded View at right, you'll get an idea of how these doors can easily be "pieced together" step-by-step. You might say the doors are "layered." First you build the rail and stile frame, and then add a grid to the inside to create the divided-light effect. And I just used a single sheet of glass that fits behind the grid. As you can see, you still get that traditional look without all the work.

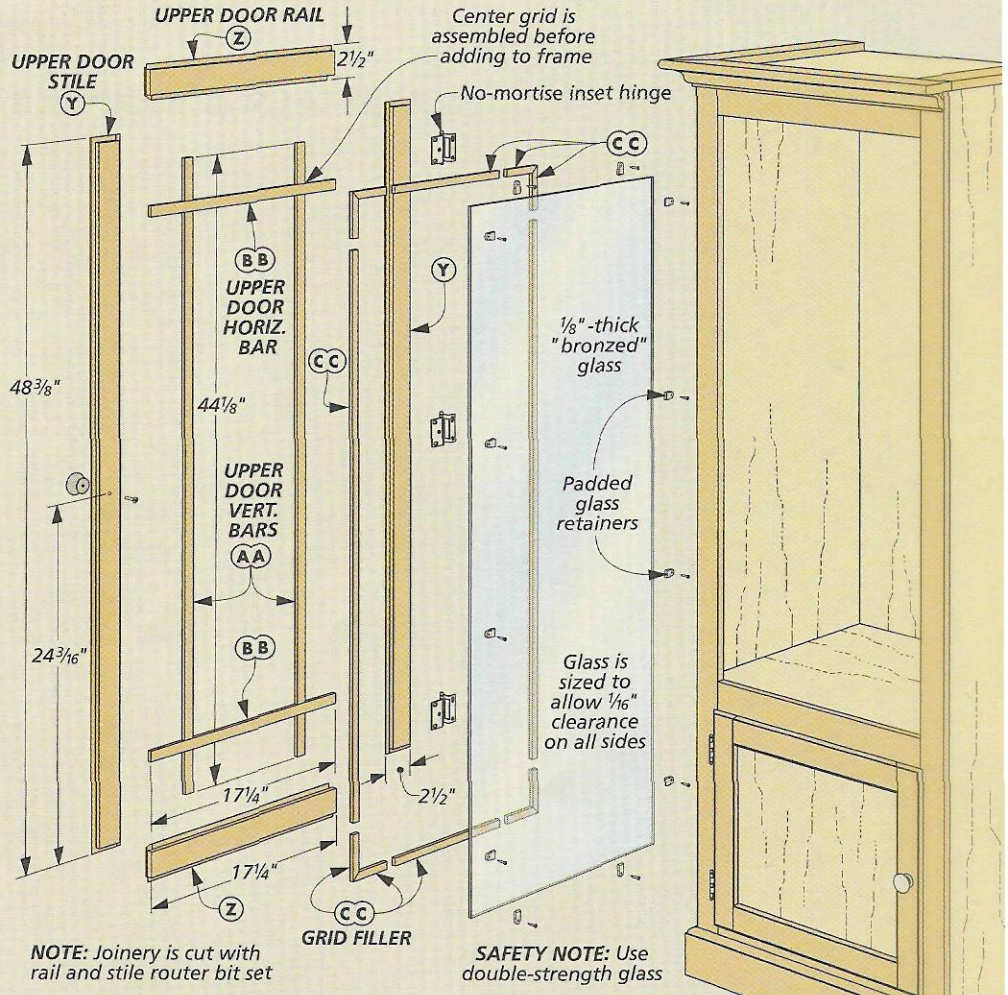

RAIL AND STILE FRAME. The first step is to build the frame. Once you've cut the *upper stiles (Y)* and *rails (Z)* to size from ¾" stock, you can take them over to the router table. The same rail and stile set you used for the panel doors will cut the joinery.

But you'll have to reconfigure the set for these doors. Instead of a groove to hold a panel, you need a rabbet to hold the grid and the glass. Figs. 1 and 1a show the setup and the article on page 20 explains the process. Once the frame is assembled, the outside edges of the door are rabbeted and molded to match the lower door.

GRID. Next the grid is added. As you can see above, the main section is just two vertical and two horizontal ¼" x ¾" bars joined with half laps. First cut all four pieces to fit snugly inside the rabbeted frame and then cut the half laps (Fig. 2). After the grid is assembled, it can be glued into the rabbet in the door frame.

GRID FILLERS. Now to complete the door, just fill in the rabbeted space between the grid bars (Fig. 3). The *grid filler (CC)* is ½" wide and will stand proud on the inside of the frame to add another visual line.

GLASS. I chose "bronzed" glass for the doors. It has a light tint so that it subtly darkens the inside of the case. It's sized with ¹⁄₁₆" of clearance on all sides and held in place with padded glass retainers. W

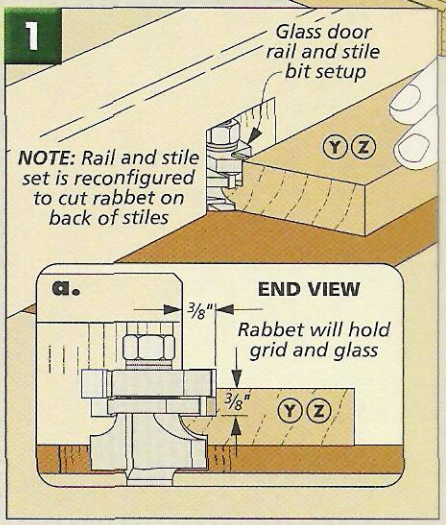

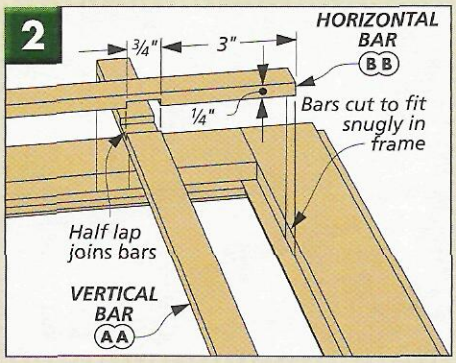

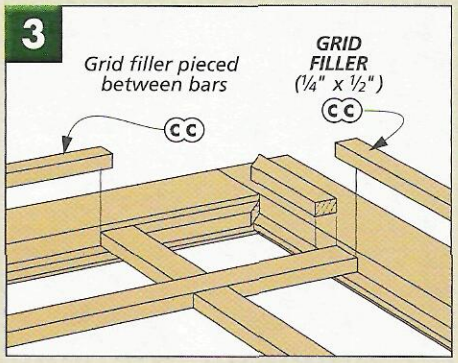

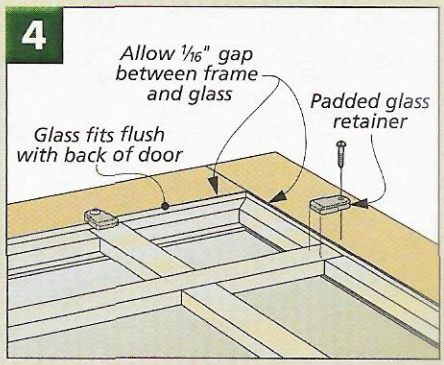

MATERIALS & SUPPLIES

TV Cabinet

Lower Case

A	Case Sides (2)	3/4 ply. - 26 1/4 x 24 1/4
B	Case Top/Bottom (2)	3/4 ply. - 26 x 45 3/4
C	Top Frame Sides (2)	3/4 x 3/4 - 24 1/2
D	Top Frame Front/Back (2)	3/4 x 3/4 - 45 3/4
E	Bottom Frame Sides (2)	3/4 x 4 1/4 - 24 1/2
F	Bottom Frame Front/Back (2)	3/4 x 4 1/4 - 45 3/4
G	Vertical Divider (1)	3/4 ply. - 21 1/4 x 18 1/2
H	Face Frame Stiles (2)	3/4 x 2 1/4 - 24 1/4
I	Face Frame Top Rail (1)	3/4 x 1 1/2 - 42 3/4
J	Face Frame Bottom Rail (1)	3/4 x 5 - 42 3/4
K	Face Frame Vertical Divider (1)	3/4 x 3/4 - 17 3/4
L	Back (1)	1/4 ply. - 46 3/4 x 24 1/4
M	Skirt Front (1)	3/4 x 4 - 48 3/4
N	Skirt Sides (2)	3/4 x 4 - 5 3/4
O	Shelves (2)	3/4 ply. - 21 x 22 1/4
P	Shelf Edging (2)	1/4 x 3/4 - 22 1/4

Upper Case

Q	Case Sides (2)	3/4 ply. - 26 1/4 x 57
R	Case Top/Bottom (2)	3/4 ply. - 26 x 45 3/4
S	Top Frame Sides (2)	3/4 x 2 3/4 - 24 1/2
T	Top Frame Front/Back (2)	3/4 x 2 3/4 - 45 3/4
U	Cleats (4)	1 1/8 x 1 1/2 - 26
V	Face Frame Stiles (2)	3/4 x 1 7/8 - 57
W	Face Frame Top Rail (1)	3/4 x 3 1/2 - 43 1/2
X	Face Frame Bottom Rail (1)	3/4 x 3/4 - 43 1/2
Y	Cornice Cap Front (1)	3/4 x 4 - 52 3/4
Z	Cornice Cap Sides (2)	3/4 x 4 - 29 3/4
AA	Crown Molding	3/4 x 2 3/8 - 120 rgh.

Doors

BB	Lower Stiles (4)	3/4 x 2 1/2 - 18 1/4
CC	Lower Rails (4)	3/4 x 2 1/2 - 17 1/4
DD	Lower Door Panels (2)	1/4 ply. - 17 1/4 x 14
EE	Upper Stiles (4)	3/4 x 2 1/2 - 52 1/2
FF	Upper Rails (4)	3/4 x 2 1/2 - 17 1/4
GG	Upper Door Panels (2)	1/4 ply. - 17 1/4 x 48 1/4
HH	Astragal (1)	1/4 x 7/8 - 52 1/2
II	Stop Blocks (2)	3/8 x 3/4 - 2 1/4

Upper Case Shelves & Back

JJ	Upper Top/Bottom (2)	3/4 ply. - 21 1/4 x 39
KK	Upper Sides (2)	3/4 ply. - 21 1/4 x 15
LL	Upper Shelf (1)	3/4 ply. - 21 1/4 x 37 1/4
MM	Lower Top/Bottom (2)	3/4 ply. - 21 1/4 x 39
NN	Lower Sides/Divider (3)	3/4 ply. - 21 1/4 x 6 1/2
OO	Shelf Edging	1/4 x 3/4 - 250 rgh.
PP	Back (1)	1/4 ply. - 46 3/4 x 57

- (2 pr.) 3/8"-Inset Ball-Tip Hinges w/Screws
- (4) 1 1/2"-dia. "Bronzed" Knobs w/Screws
- (2) Narrow Magnetic Catches w/Screws
- (4) Heavy-Duty Levelers
- (2 sets) 22" Heavy-Duty Pocket Door Slides
- (2 sets) 35mm Inset Hinges w/Carrier Strips
- (8) 30mm x 1/4"-20 Connector Bolts
- (8) 1/4-20 Threaded Inserts
- (2) Rectangular Plastic Grommets
- (12) 1/4" Shelf Supports
- (58) #8 x 1 1/2" Fh Woodscrews
- (64) #8 x 1 1/4" Fh Woodscrews
- (24) #6 x 3/4" Fh Woodscrews

One Side Cabinet

A	Case Sides (2)	3/4 ply. - 21 1/4 x 77
B	Case Dividers (3)	3/4 ply. - 21 x 24
C	Top Frame Sides (2)	3/4 x 3 - 19 1/2
D	Top Frame Front/Back (2)	3/4 x 3 - 24
E	Middle Frame Sides (2)	3/4 x 1 7/8 - 19 1/2
F	Middle Frame Front/Back (2)	3/4 x 1 7/8 - 24
G	Bottom Frame Sides (2)	3/4 x 4 1/4 - 19 1/2
H	Bottom Frame Front/Back (2)	3/4 x 4 1/4 - 24
I	Face Frame Stiles (2)	3/4 x 21 1/4 - 77
J	Face Frame Top Rail (1)	3/4 x 3 3/4 - 21
K	Face Frame Middle Rail (1)	3/4 x 2 5/8 - 21
L	Face Frame Bottom Rail (1)	3/4 x 5 - 21
M	Back (1)	1/4 ply. - 25 x 77
N	Shelves (5)	3/4 ply. - 20 1/2 x 23 3/4
O	Shelf Edging	1/4 x 3/4 - 125 rgh.
P	Cornice Cap Front (1)	3/4 x 4 - 28 1/4
Q	Cornice Cap Side (1)	3/4 x 4 - 24 3/4
R	Cornice Cap Filler (1)	3/4 x 4 - 20 3/4
S	Crown Molding	3/4 x 2 3/8 - 60 rgh.
T	Skirt Front (1)	3/4 x 4 - 26 1/4
U	Skirt Side (1)	3/4 x 4 - 22 3/4
V	Lower Door Stiles (2)	3/4 x 2 1/2 - 18 1/4
W	Lower Door Rails (2)	3/4 x 2 1/2 - 17 1/4
X	Lower Door Panel (1)	1/4 ply. - 17 1/4 x 14
Y	Upper Door Stiles (2)	3/4 x 2 1/2 - 48 3/8
Z	Upper Door Rails (2)	3/4 x 2 1/2 - 17 1/4
AA	Upper Door Vertical Bars (2)	1/4 x 3/4 - 44 1/8
BB	Upper Door Horizontal Bars (2)	1/4 x 3/4 - 17 1/4
CC	Upper Door Grid Filler	1/4 x 1/2 - 150 rgh.

- (3 pr.) 3/8"-Offset Ball-Tip Hinges w/Screws
- (2) 1 1/2"-dia. "Bronzed" Knobs w/Screws
- (3) Narrow Magnetic Catches w/Screws
- (1) Rectangular Plastic Grommet
- (20) 1/4" Shelf Supports
- (4) Heavy-Duty Levelers
- (12) Padded Glass Retainers
- (53) #8 x 1 1/2" Fh Woodscrews
- (30) #8 x 1 1/4" Fh Woodscrews
- (15) #6 x 3/4" Fh Woodscrews
- (8) 30mm x 1/4"-20 Connector Bolts w/Cap Nuts
- (2) 1/8"-thick "Bronzed" Glass Panels

SOURCES

Fast Finishing

Water-based stains and finishes are available in a wide number of stock and custom colors. You should be able to find them at paint stores or home centers. See the sources listed in the margin for suppliers or call the *Woodsmith Store*.

Rail and Stile Bits

Rail and stile router bit sets, like the one used for both the solid-panel doors and glass-panel doors in the home entertainment center, are available in a variety of classic profiles.

We used a "round" profile set from *Whiteside Machine Co.* with an undersized plywood groove cutter (#6001X). To find a local dealer, you can call the company or visit their website listed at right.

Similar bit sets are available from the sources listed in the margin.

Home Entertainment Center

All of the hardware for the computer cabinet is available from *Rockler* and we've listed the part numbers.

TV CABINET. For the doors, you'll need two pairs of 3/8" offset ball tip hinges (#54604), four 1½"-dia. "bronzed" knobs (#43123), and two magnetic catches (#26559). The upper doors require two sets of 22" heavy-duty flipper door slides (#35580) and two sets of 35mm inset hinges and carrier strips (#35673).

We used threaded inserts (#33183) and connector bolts (#31831) to connect the upper and lower cabinets and to hang the shelves inside the upper cabinet. You'll also need ¼" shelf supports (#33902) and two plastic grommets (#91348) for the case. Heavy-duty lifting levelers (#81239) help keep the cabinet level and plumb. The oak crown molding came from *Rockler* as well. We purchased one 96" (#43740) and one 48" (#42418) length for the unit.

SIDE CABINETS. The display cabinets use a lot of the same hardware as the TV cabinet. But to connect the side units to the center, you'll need additional connector bolts and some cap nuts (#31815). The side cabinets also need one piece of crown molding 48" long. The glass is slightly "bronzed" double-strength glass we ordered from a local glass shop.

Table Saw Accessories

One of the best things about making the table saw accessories is that it does not take a lot of unusual or hard-to-find supplies. You should be able to find most of the knobs, hardwood, *Plexiglas*, and hardboard at a home improvement or hardware store. You can also order a variety of jig supplies from *Rockler*.

For quite a few of the accessories featured, we used Baltic birch plywood. It has a number of things going for it that ordinary plywood lacks. For one, Baltic birch is flat and consistent in thickness. Both faces are smooth and there aren't any interior voids.

About the only piece of hardware that you might have trouble finding are the toggle clamps used in the straight line rip jig. We ordered them from *McFeely's* (#TC-5110). See the margin at right.

Online Extras

If you don't have internet access, we'll mail a copy of the Online Extras to you. Just send a self-addressed, stamped #10 envelope to:

Woodsmith No. 149
Online Extras
P. O. Box 842
Des Moines, IA 50304

MAIL ORDER SOURCES

Similar project supplies may be ordered from the following companies:

Rockler
800-279-4441
rockler.com
Cap Nuts, Connector Bolts, Crown Molding, Door Slides, Grommets, Hinges, Knobs, Magnetic Catches, Router Bits, Shelf Supports, Water-based Stains and Finishes

Woodsmith Store
800-835-5084
Grommets, Hinges, Knobs, Magnetic Catches, Router Bits, Shelf Supports, Water-based Stains and Finishes

McFeely's
800-443-7937
mcfeelys.com
Router Bits, Toggle Clamps

Lee Valley
800-871-8158
leevalley.com
Door Slides, Grommets, Hinges, Knobs, Router Bits

Whiteside Machine Co.
800-225-3982
whitesiderouterbits.com
Router bits

Woodcraft
800-225-1153
woodcraft.com
Grommets, Knobs, Shelf Supports, Water-based Stains and Finishes

Woodworker's Supply
800-645-9292
woodworker.com
Hinges, Knobs, Router Bits, Shelf Supports, Water-based Stains and Finishes

WOODSMITH PROJECT SUPPLIES

We now feature hardware from **ROCKLER** in many of our new project kits. To order, please use our toll-free order line, see below. It's open Monday through Friday, from 8 AM to 5 PM Central Time. Before calling, please have your VISA, MasterCard, Discover, or American Express card ready.

If you would prefer to mail in an order, please call the toll-free phone number below for more information concerning shipping charges as well as any applicable sales tax.

1-800-444-7527

Woodsmith *on the web*

- "Online Extras" - Plans, Patterns, & More
- Over 100 Woodworking Tips Online
- Visit Our Readers' Project Photo Gallery
- Project Plans You Can Download
- Catalog of Project Kits, Tools, Jigs, & Plans
- Forums for Woodworking, Tools, & Classifieds
- Links to Other Woodworking Sites
- Order *Woodsmith* & *ShopNotes* Back Issues

www.woodsmith.com

Online Customer Service

Click on Subscriber Services at ***www.woodsmith.com***

- Access your account status
- Change your mailing or email address
- Pay your bill
- Renew your subscription
- Tell us if you've missed an issue
- Find out if your payment has been received

A LAST LOOK

FINAL DETAILS

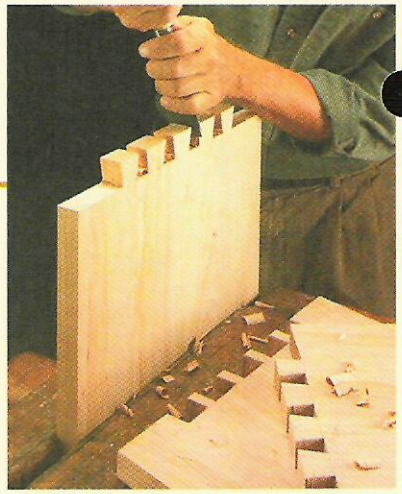

▲ **Big Dovetails.** *With a band saw doing the rough work, all it takes is some chisel clean-up to get perfect-fitting dovetails. Step-by-step instructions begin on page 6.*

◄ **Home Entertainment Center.** *This modular system will hold all your home entertainment components and more. Best of all, it features simple joinery and some unique hardware. See page 22 for complete plans.*

Display Cabinet. ► *Build it with the entertainment center or as a stand-alone piece. Either way, the attractive glass door and handsome details will set it apart. Turn to page 30 for instructions.*

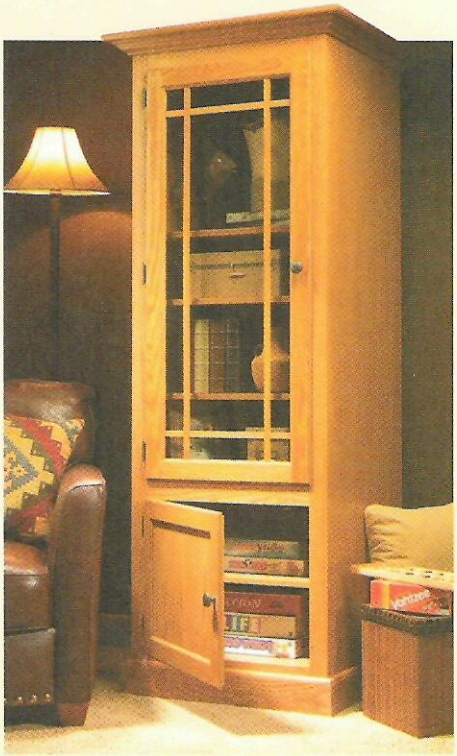

▲ **Nesting Tables.** *It's all about the dovetails. These telescoping tables feature a unique shape with some traditional joinery. But you don't have to be a dovetail expert — just follow our simple band saw technique. The detailed instructions begin on page 10.*

DISPLAY CABINET

Need a little extra space for storage or display? You can build this roomy cabinet as a stand-alone.

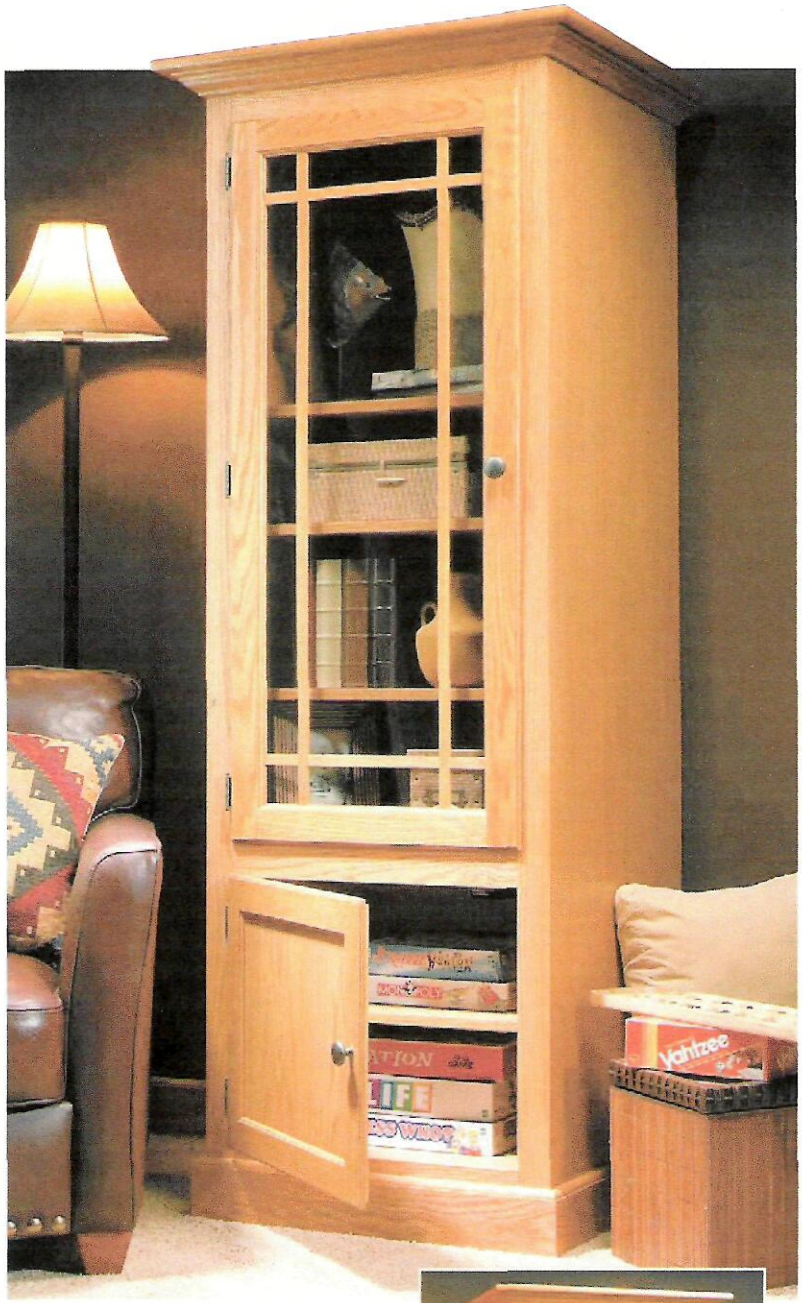

The photos at right say it better than I can. Just one look and you can see that this cabinet, built as a stand-alone, makes a very attractive and functional storage and display piece. And there are two ways to go here. If you like the challenge of building the divided-light glass door – go for it. But as you see in the lower photo, you can skip the upper door, and still end up with a great piece of furniture.

WHAT'S DIFFERENT. The changes you'll need to make in order to build this cabinet as a stand-alone really don't amount to much. They just involve a little work on the bottom skirt and the top cornice. Everything else stays exactly the same.

CORNICE. A quick look at Fig. 1 shows how to fit the cornice molding. On this version you want the molding to wrap around three sides. First, add the cornice cap. Miter the pieces to length and fasten them in place with glue and woodscrews. Then miter the crown molding to fit underneath and glue and nail it in place. This will top off the cabinet nicely.
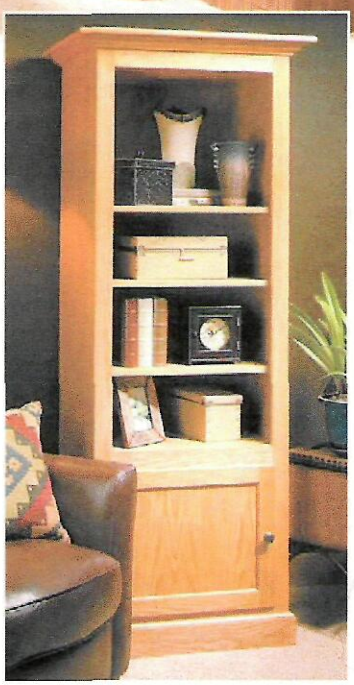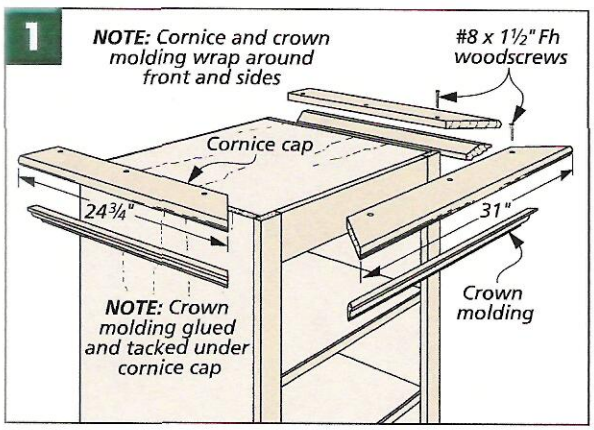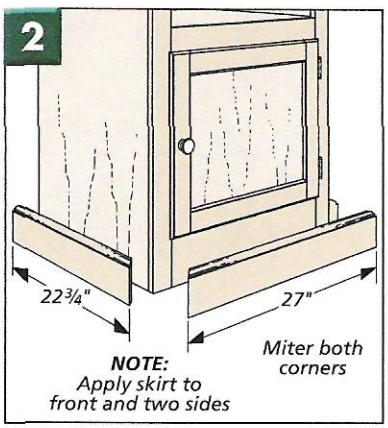
SKIRT. The changes to the skirt are along the same lines. You want it to fit continuously around the front and two sides instead of cutting it to butt up to the center cabinet. Fig. 2 shows what you'll need to do and it's all pretty straightforward. W